1

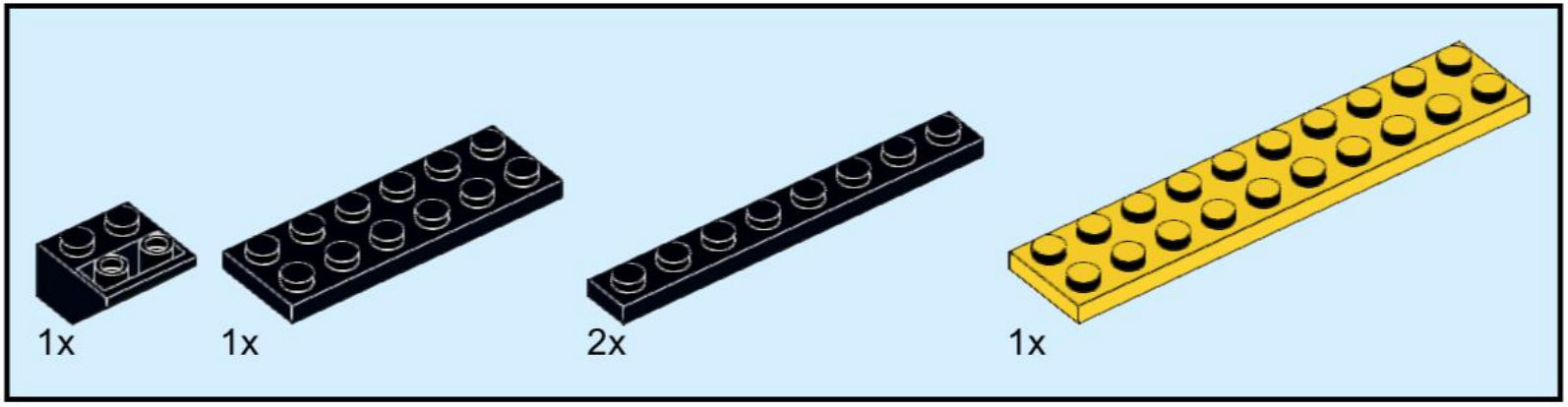

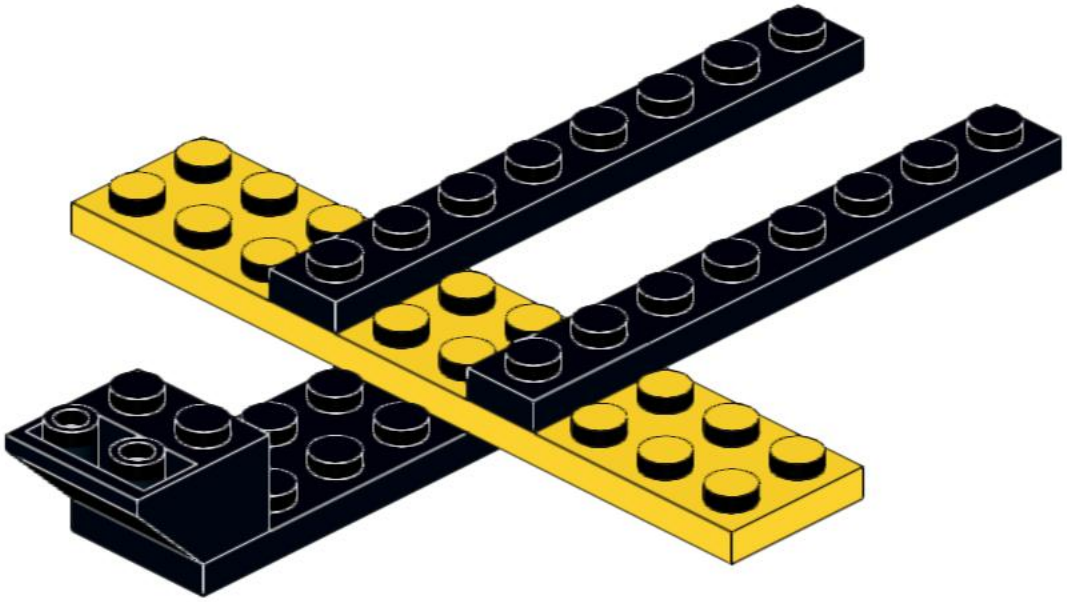

2

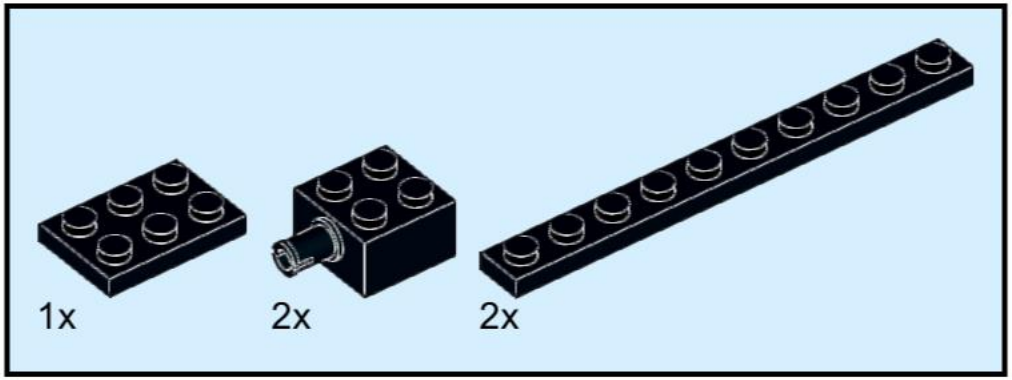

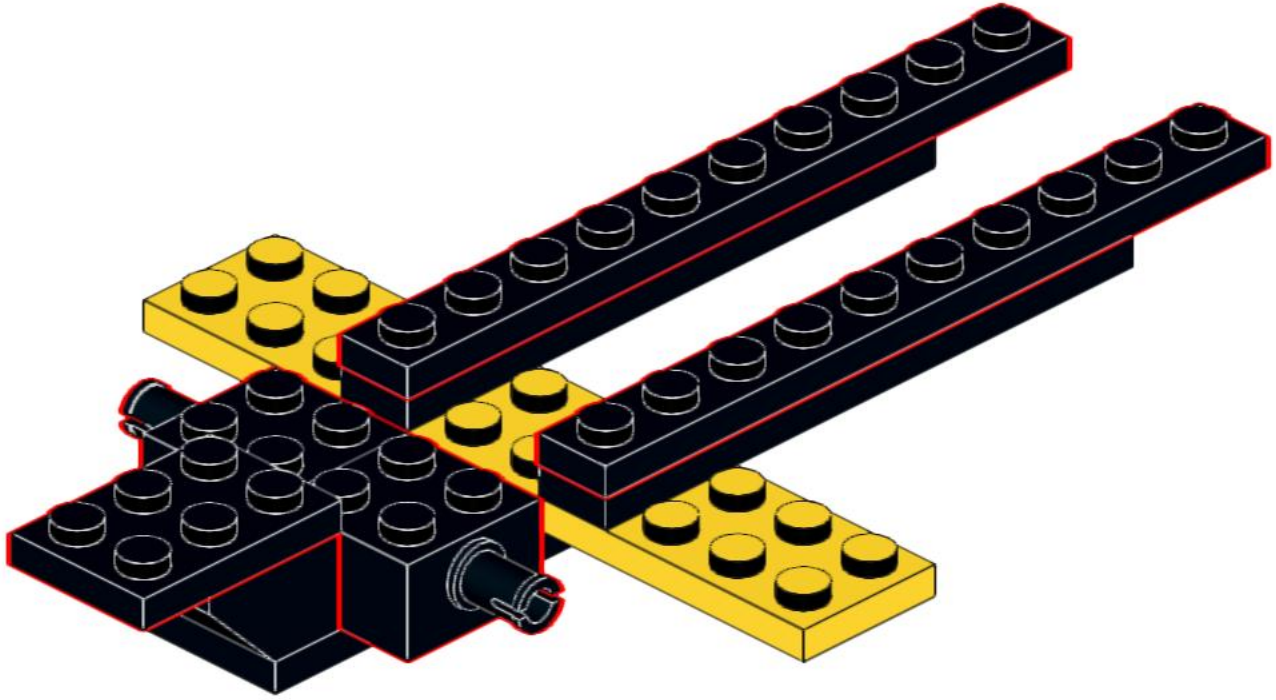

3

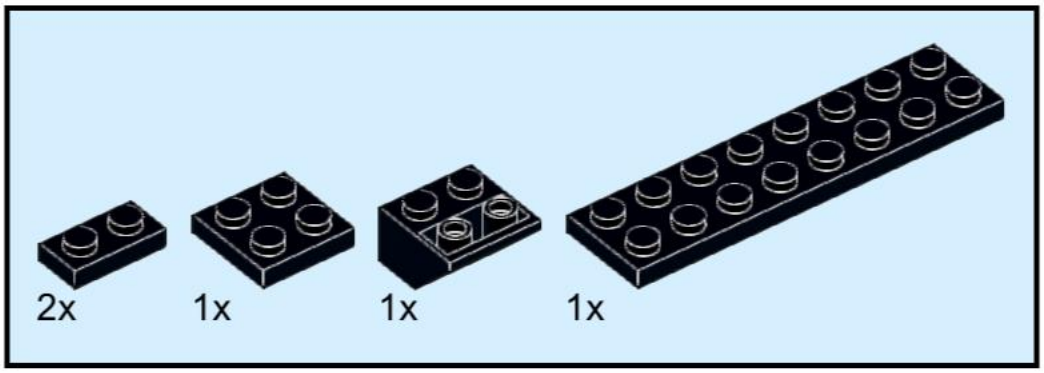

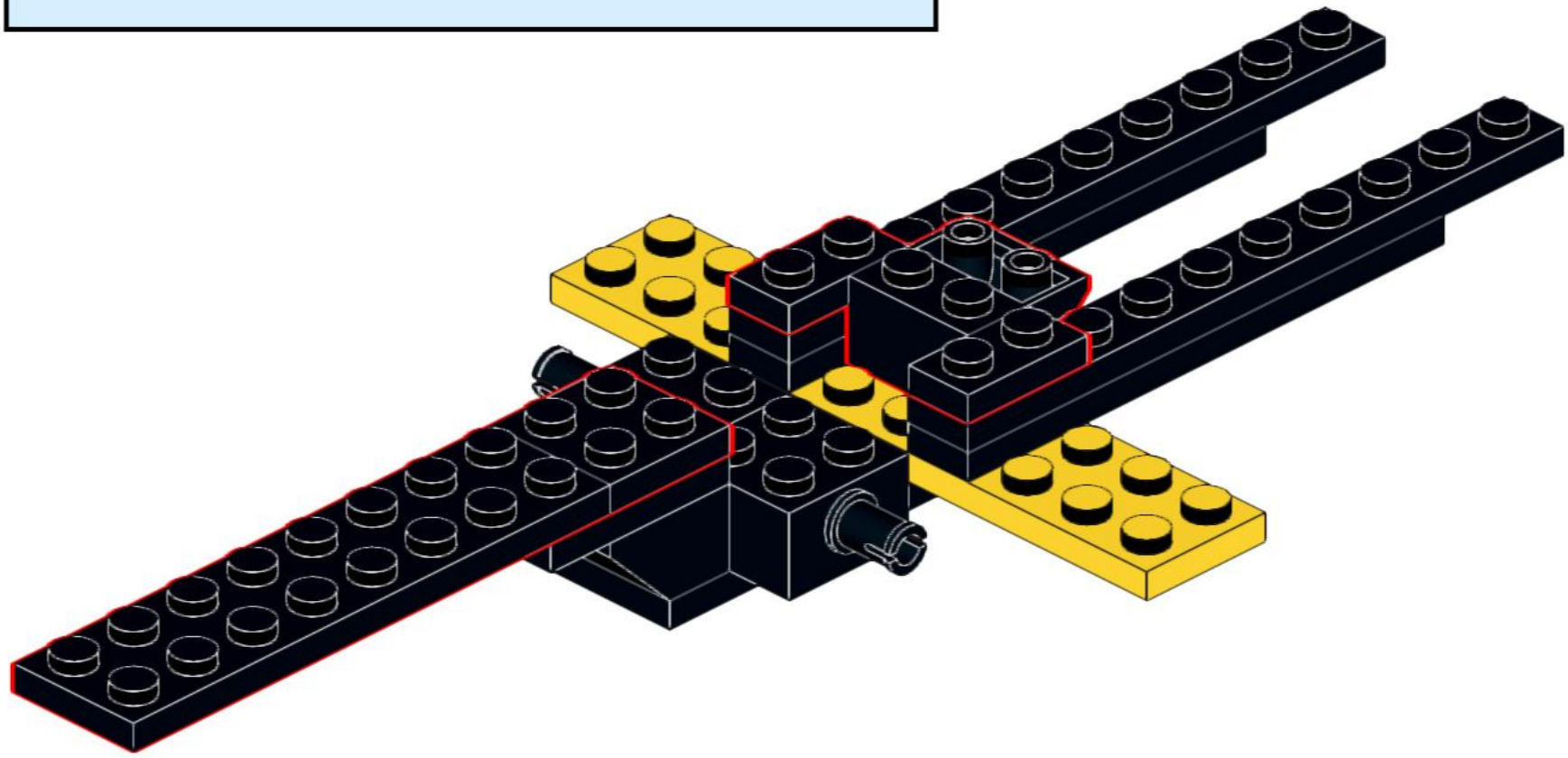

4

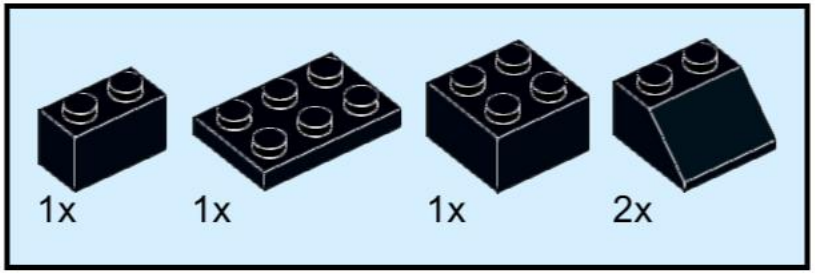

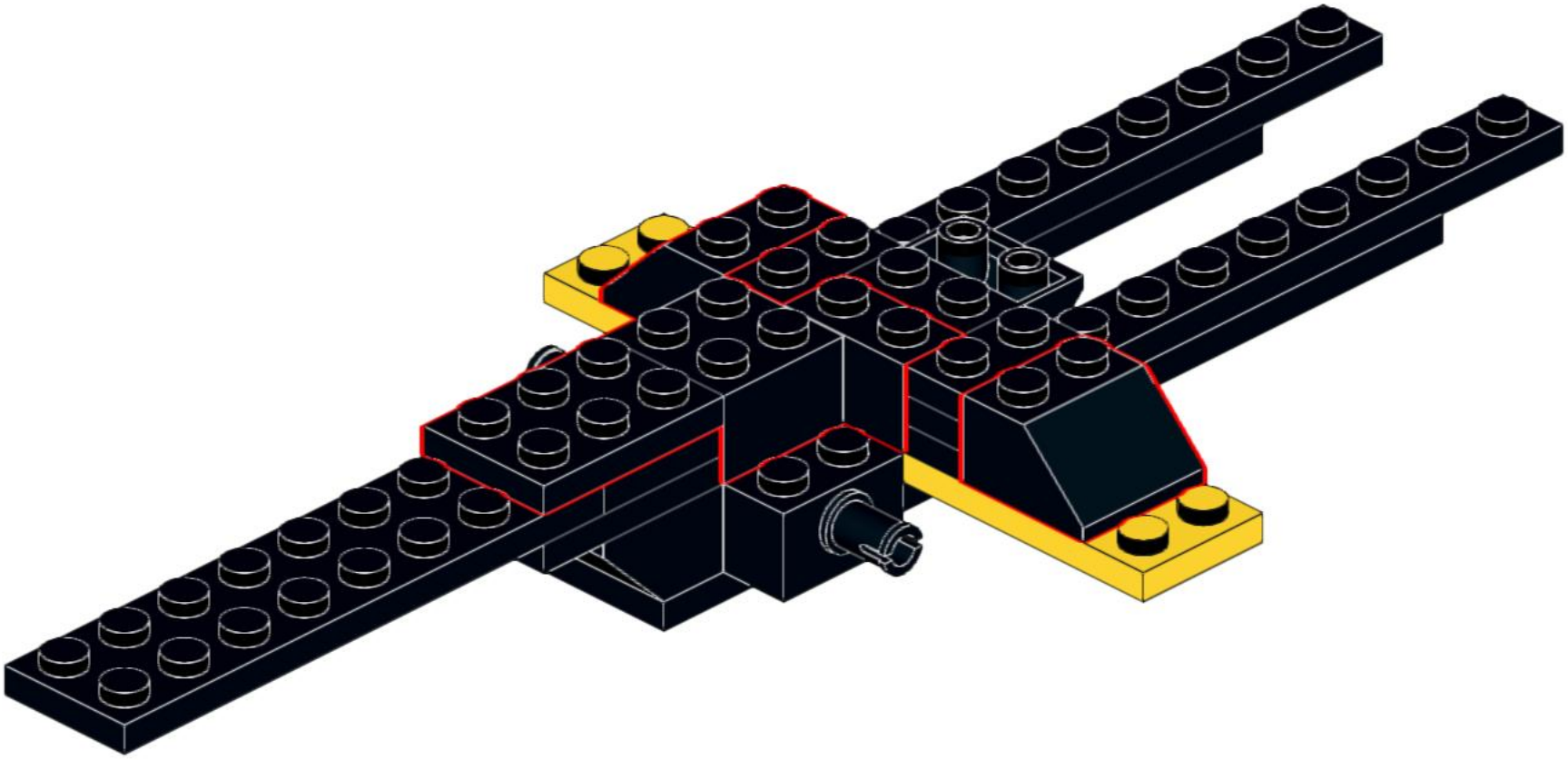

5

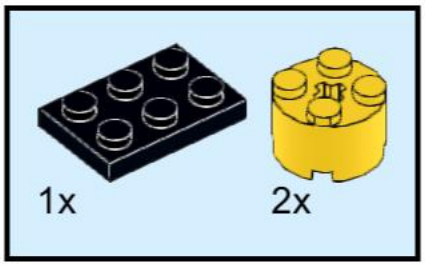

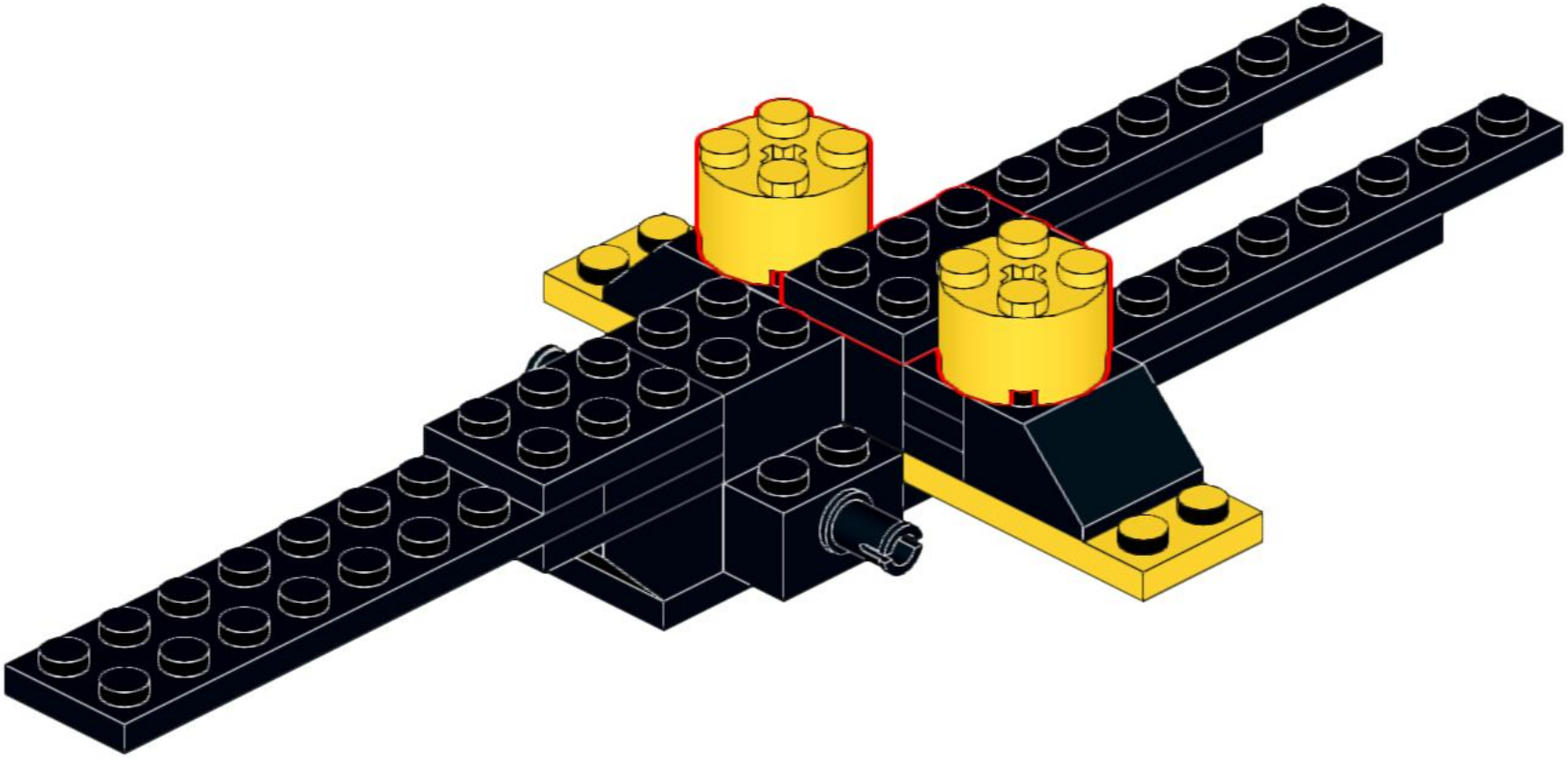

6

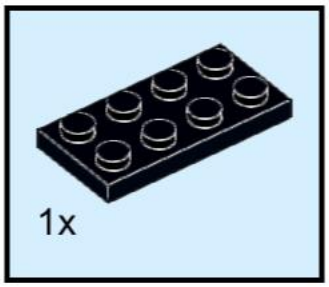

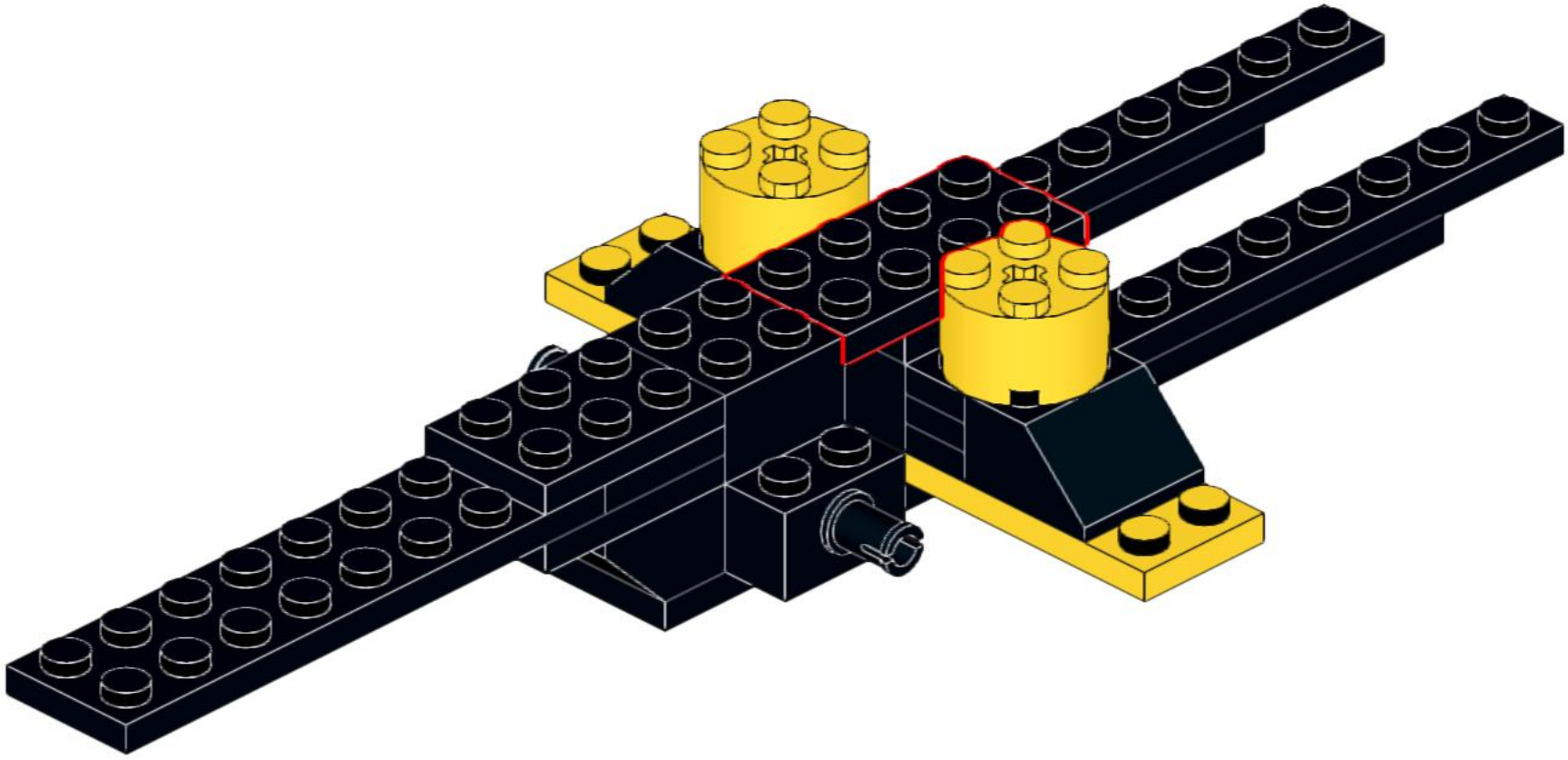

7

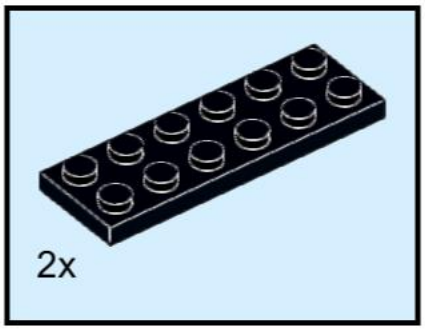

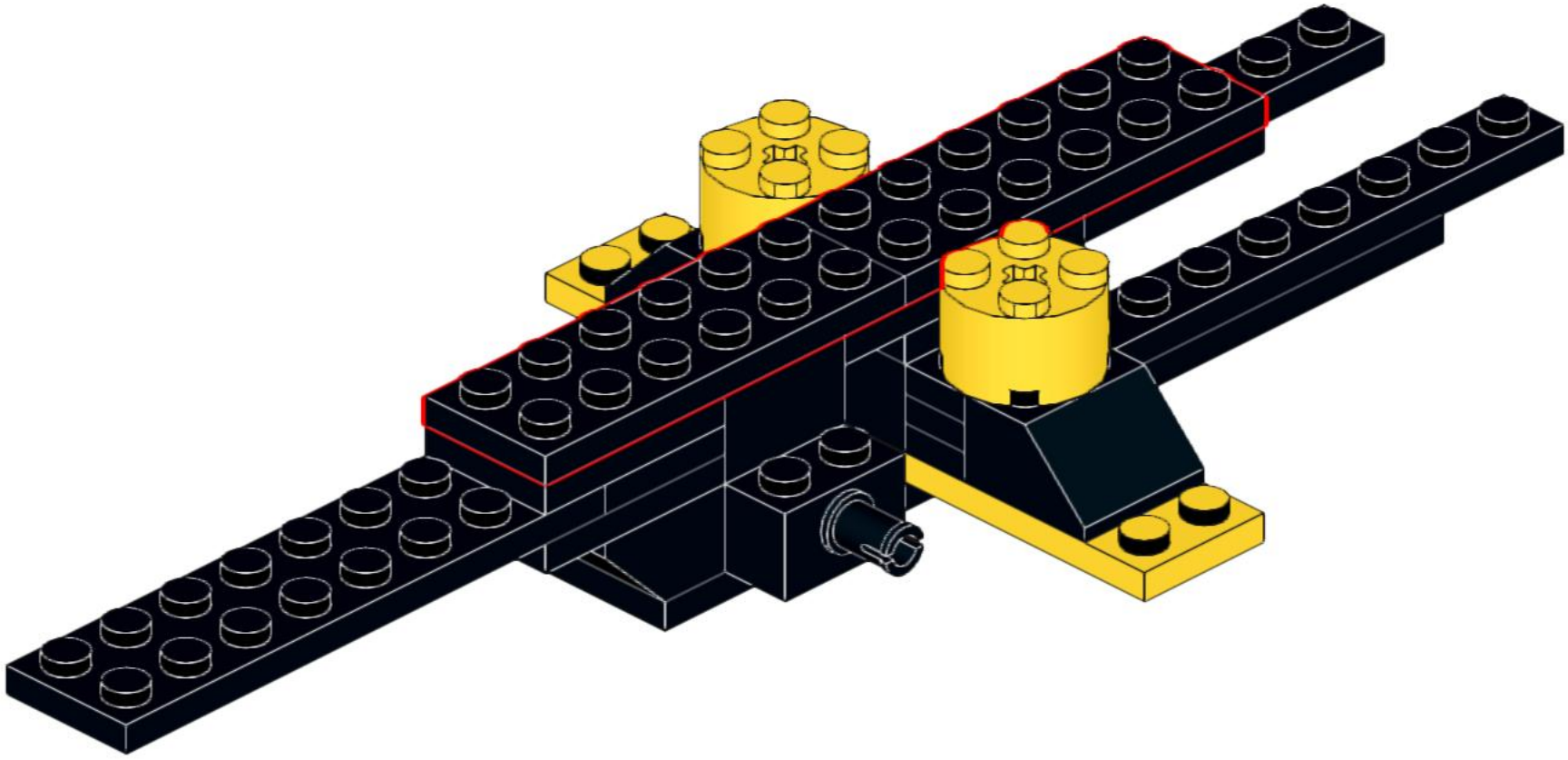

8

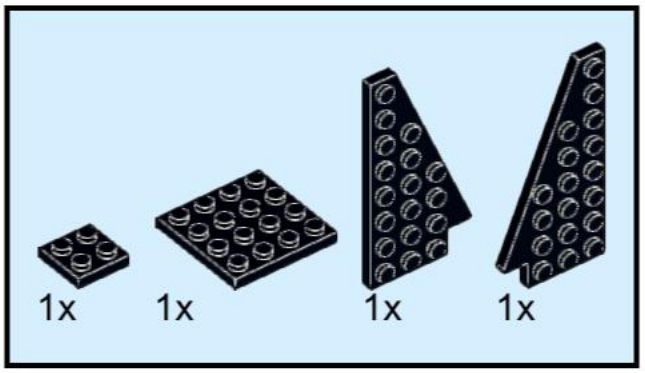

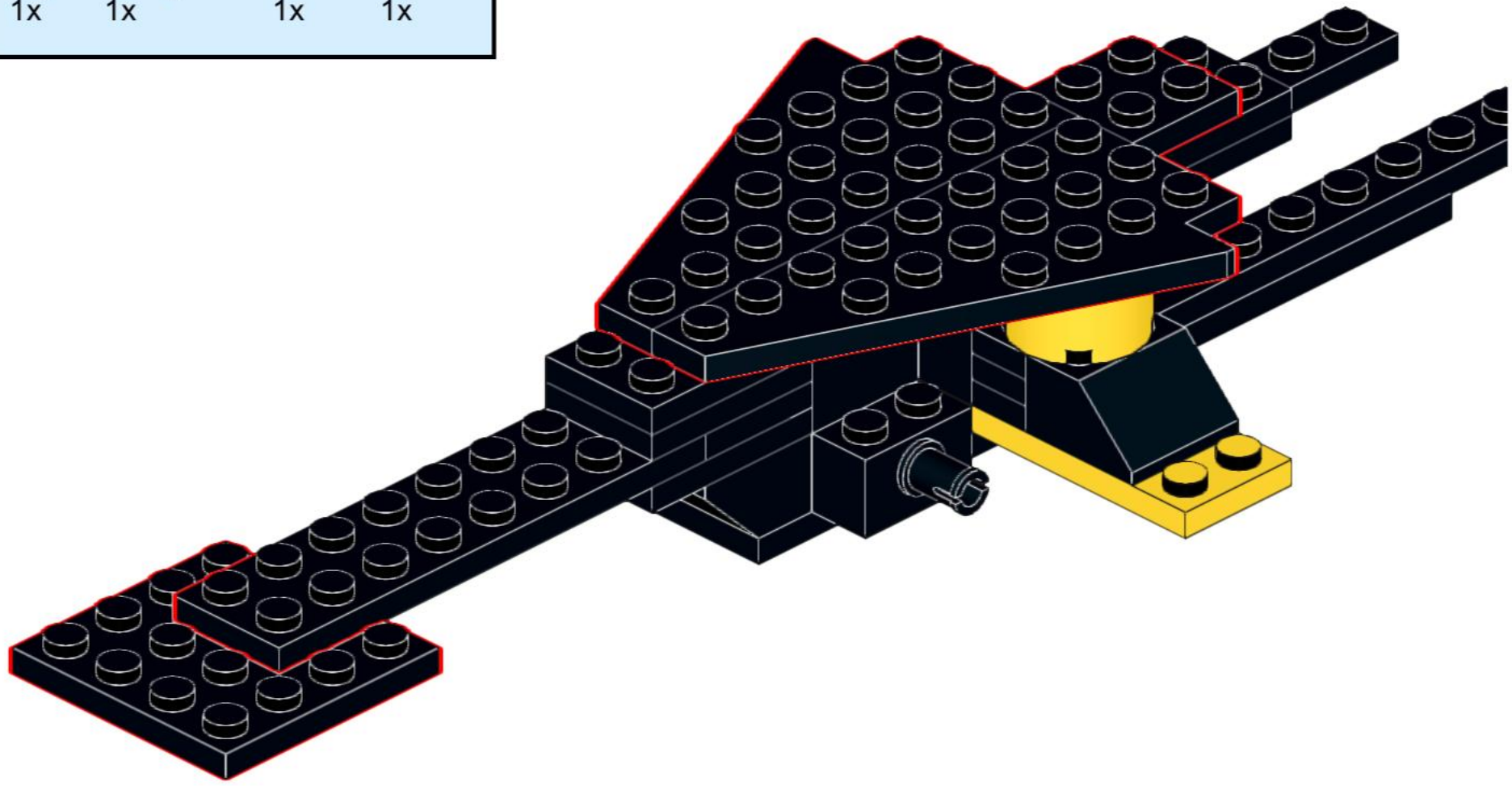

9

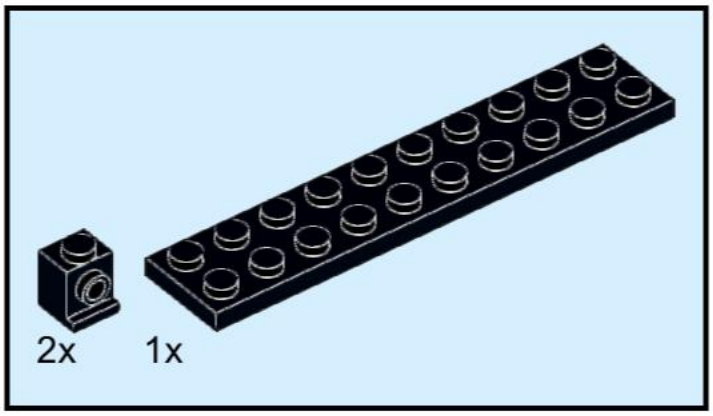

10

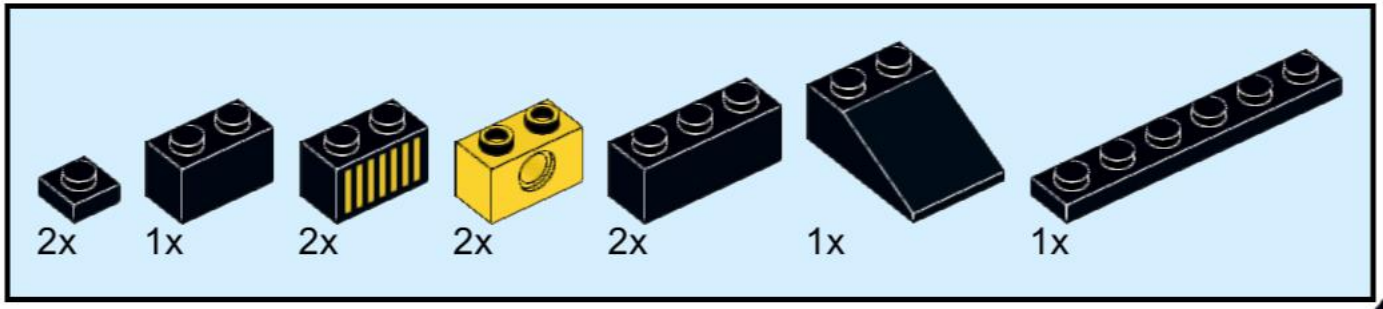

11

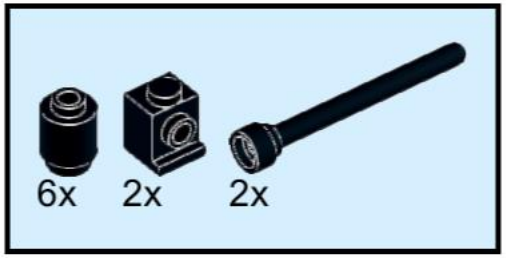

12

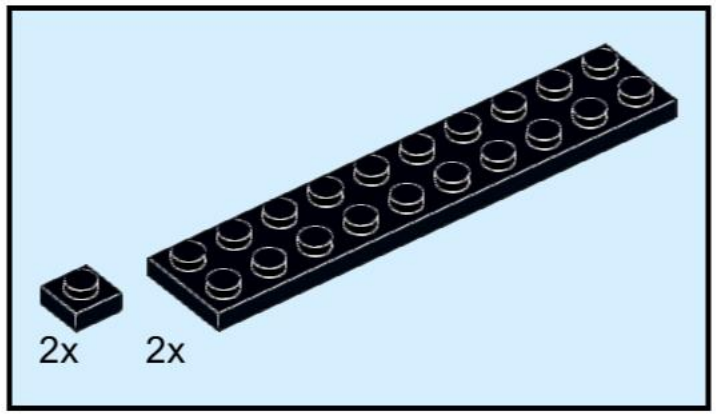

13

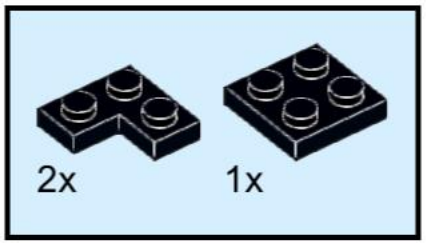

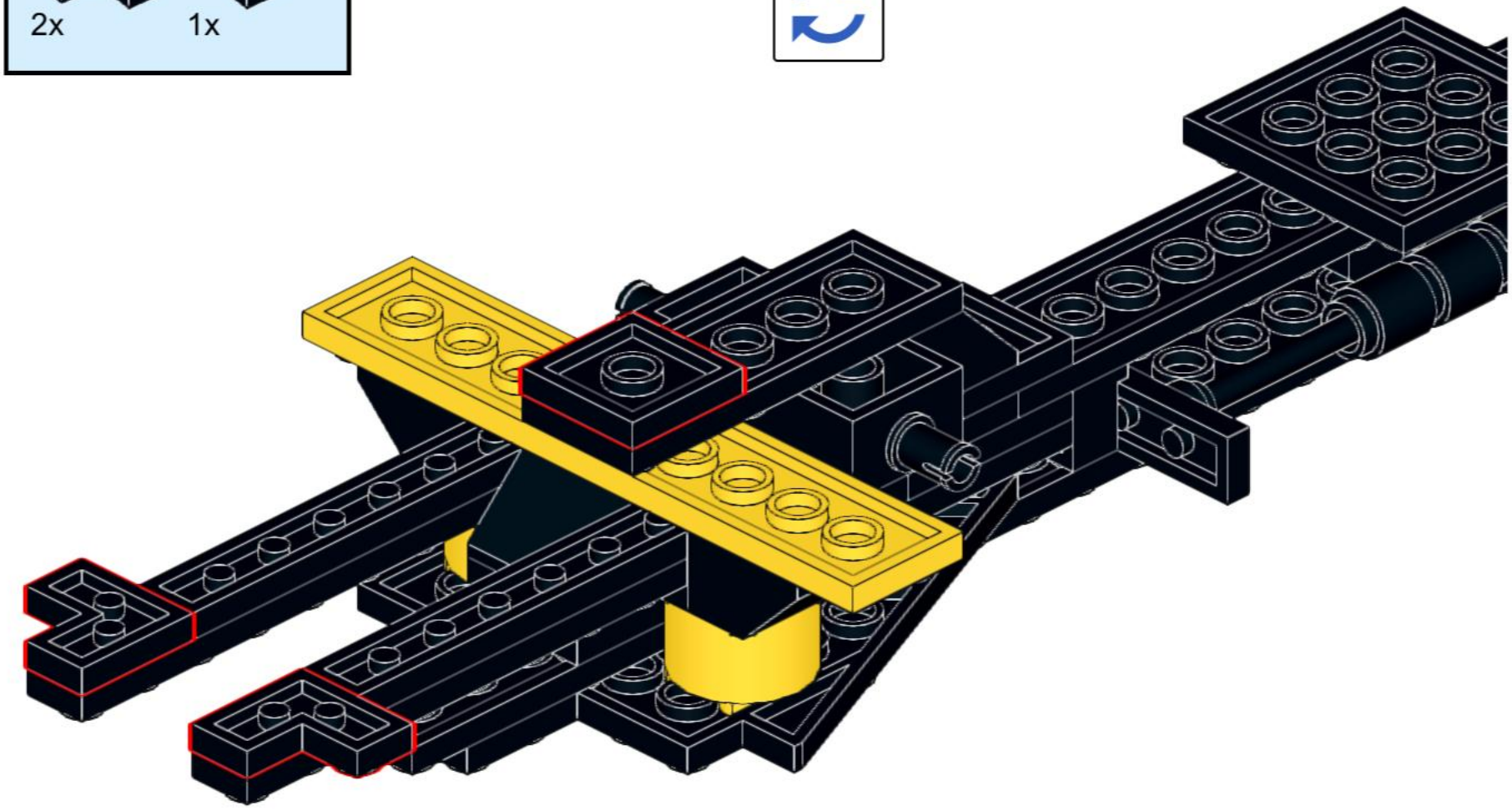

14

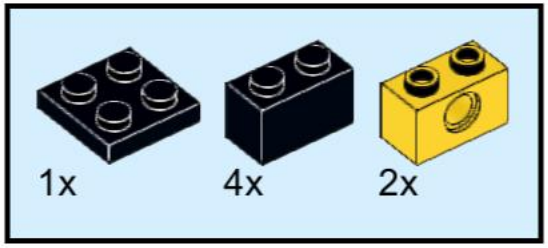

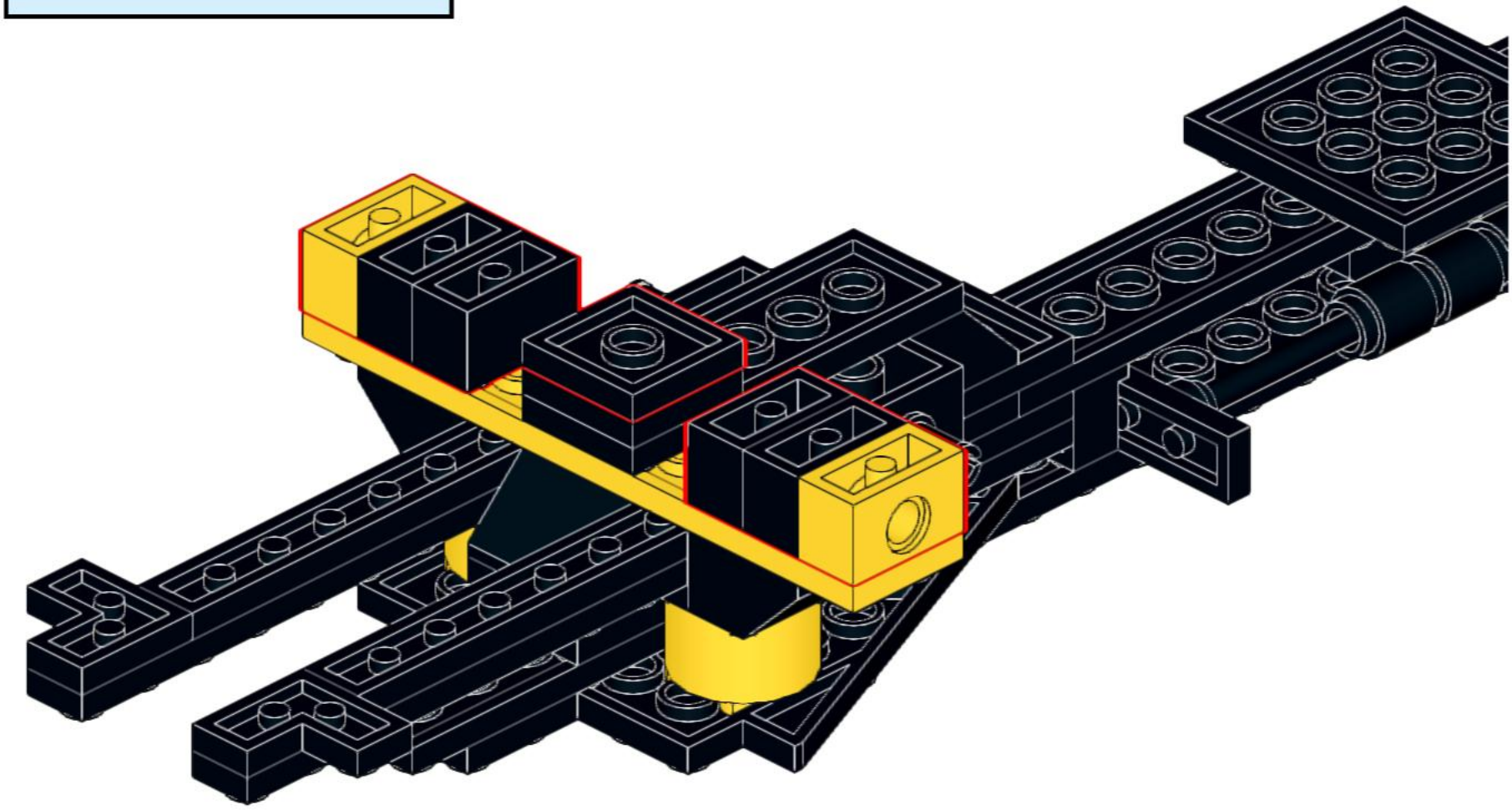

15

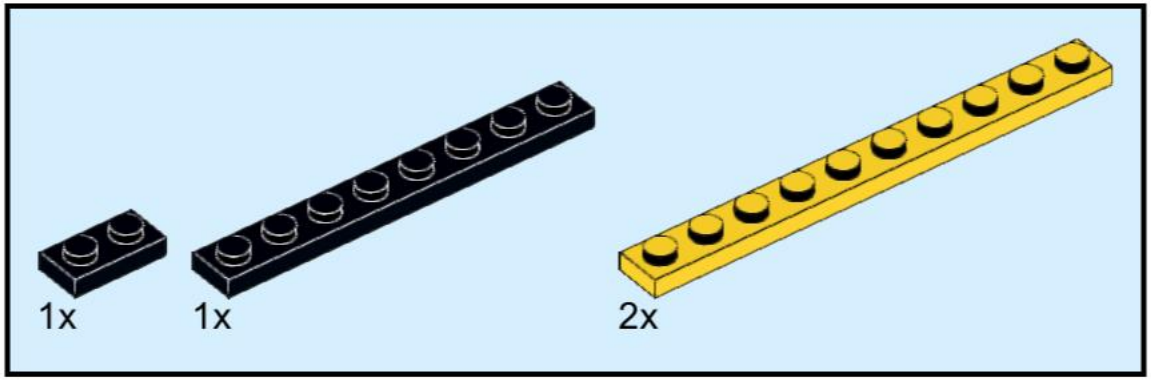

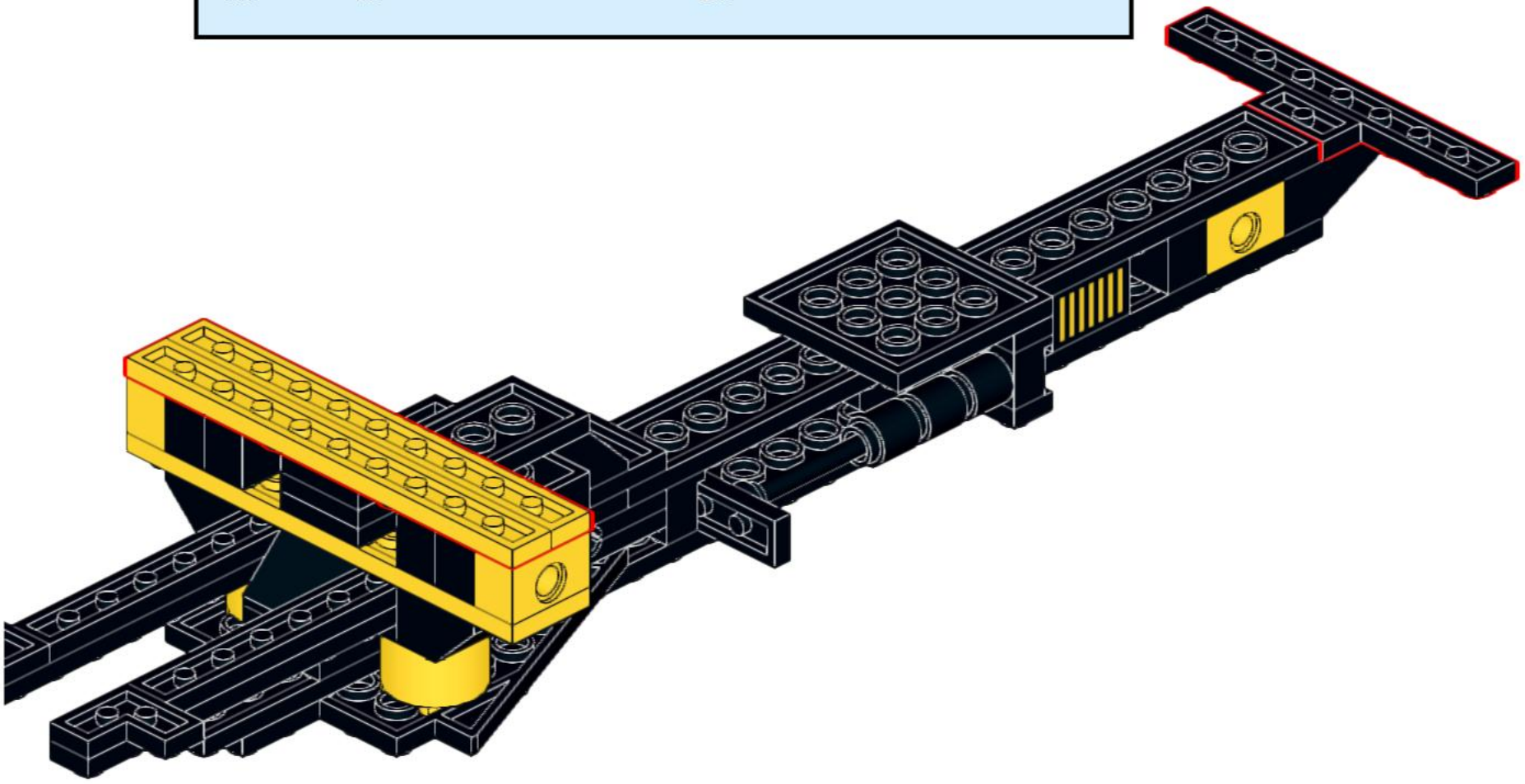

16

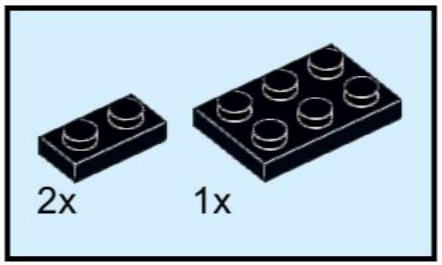

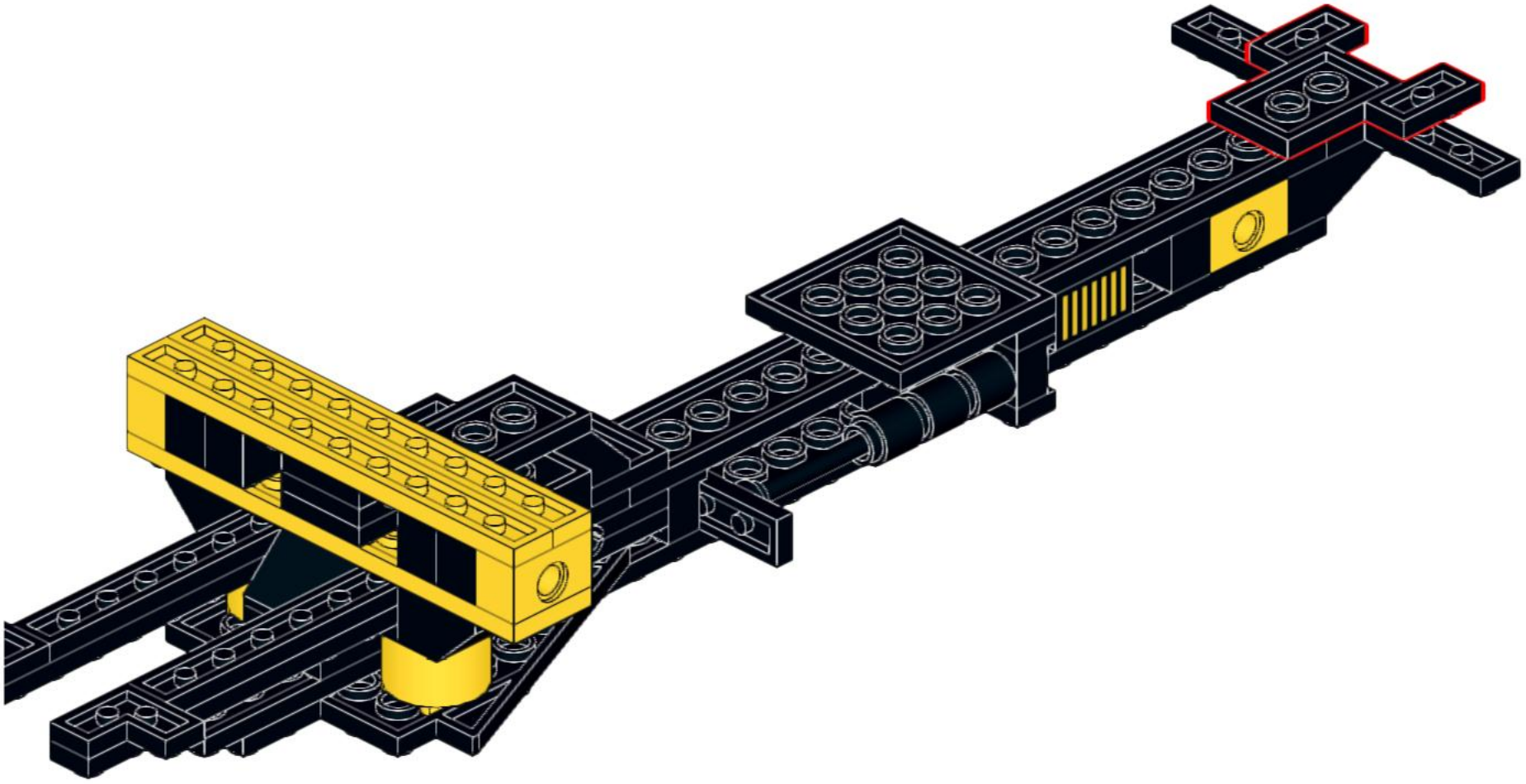

17

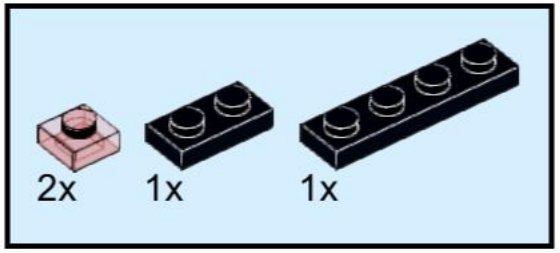

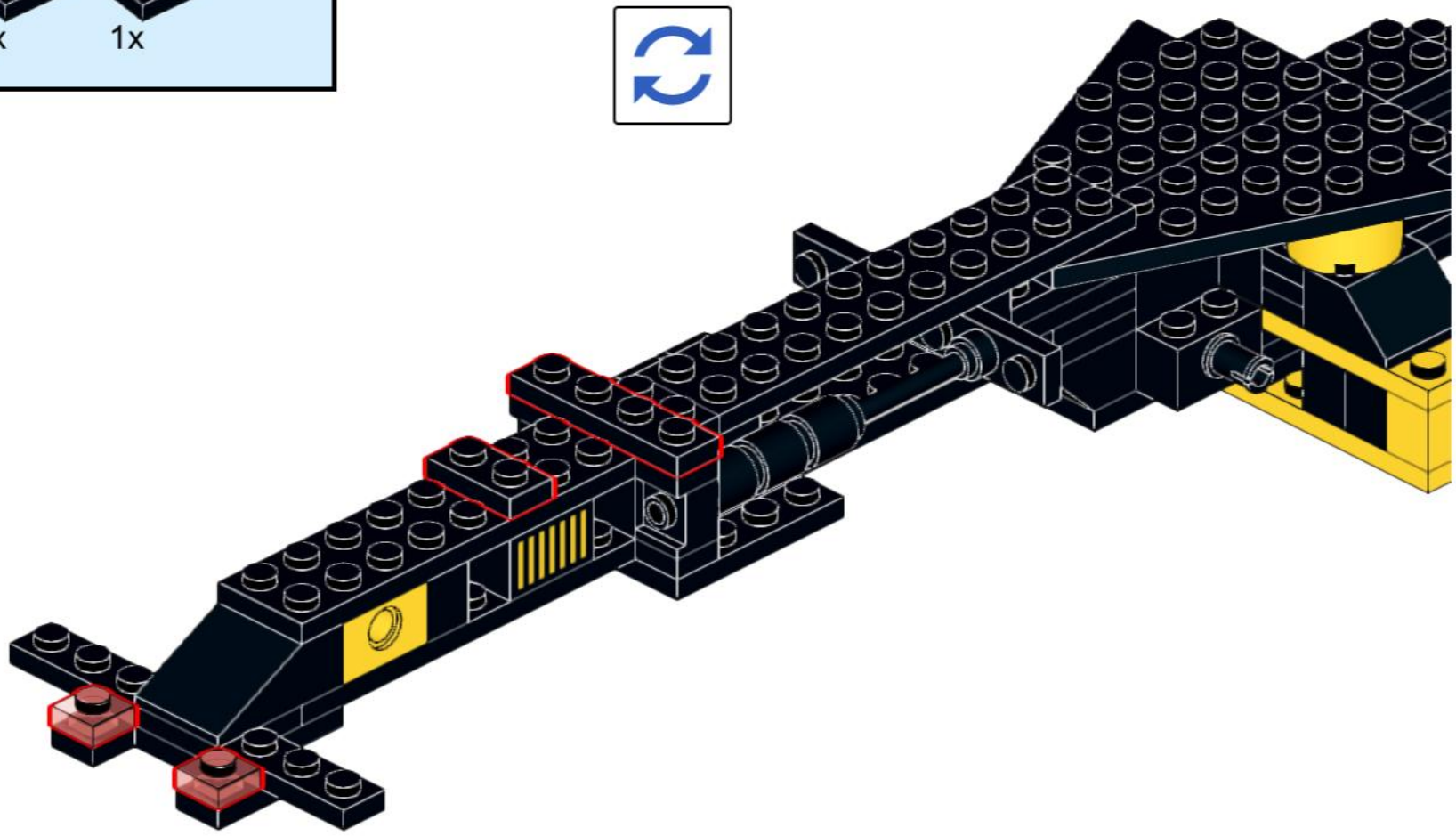

18

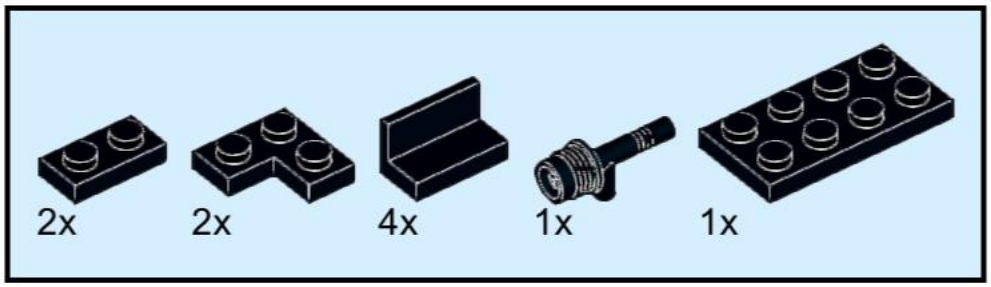

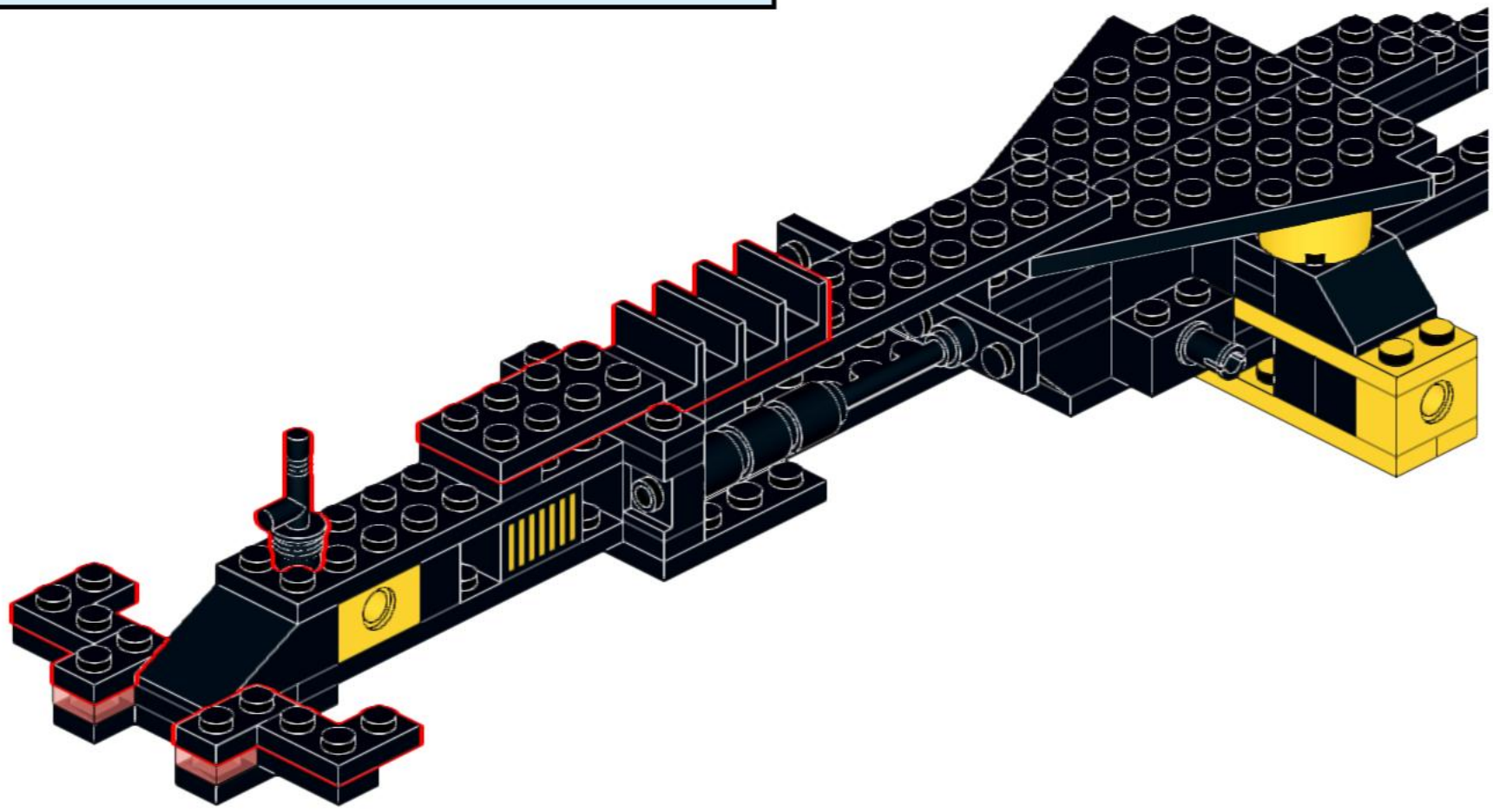

19

10x

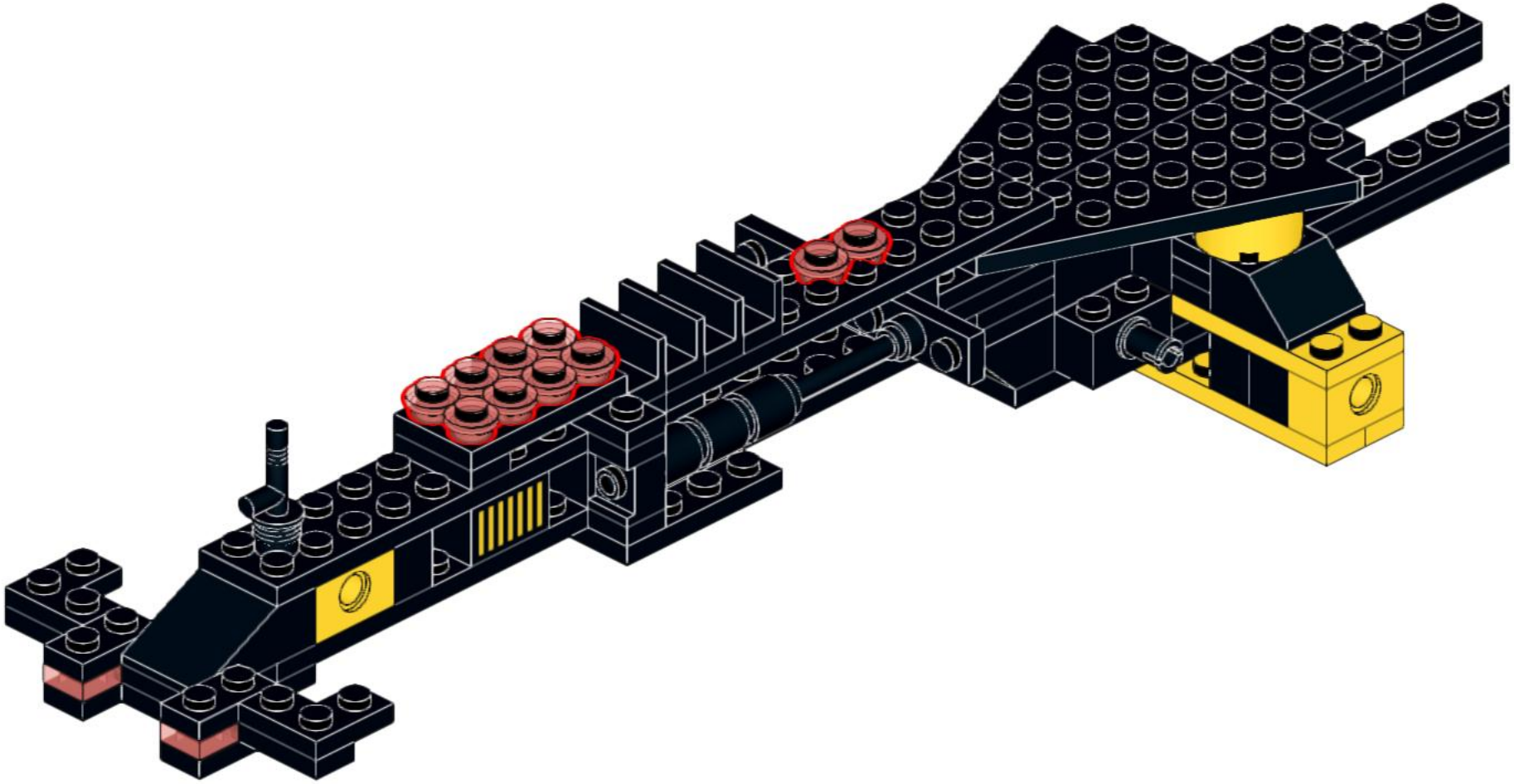

20

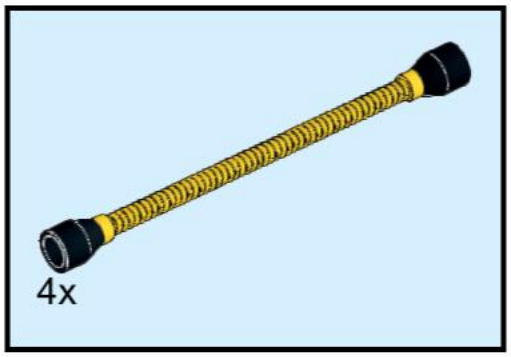

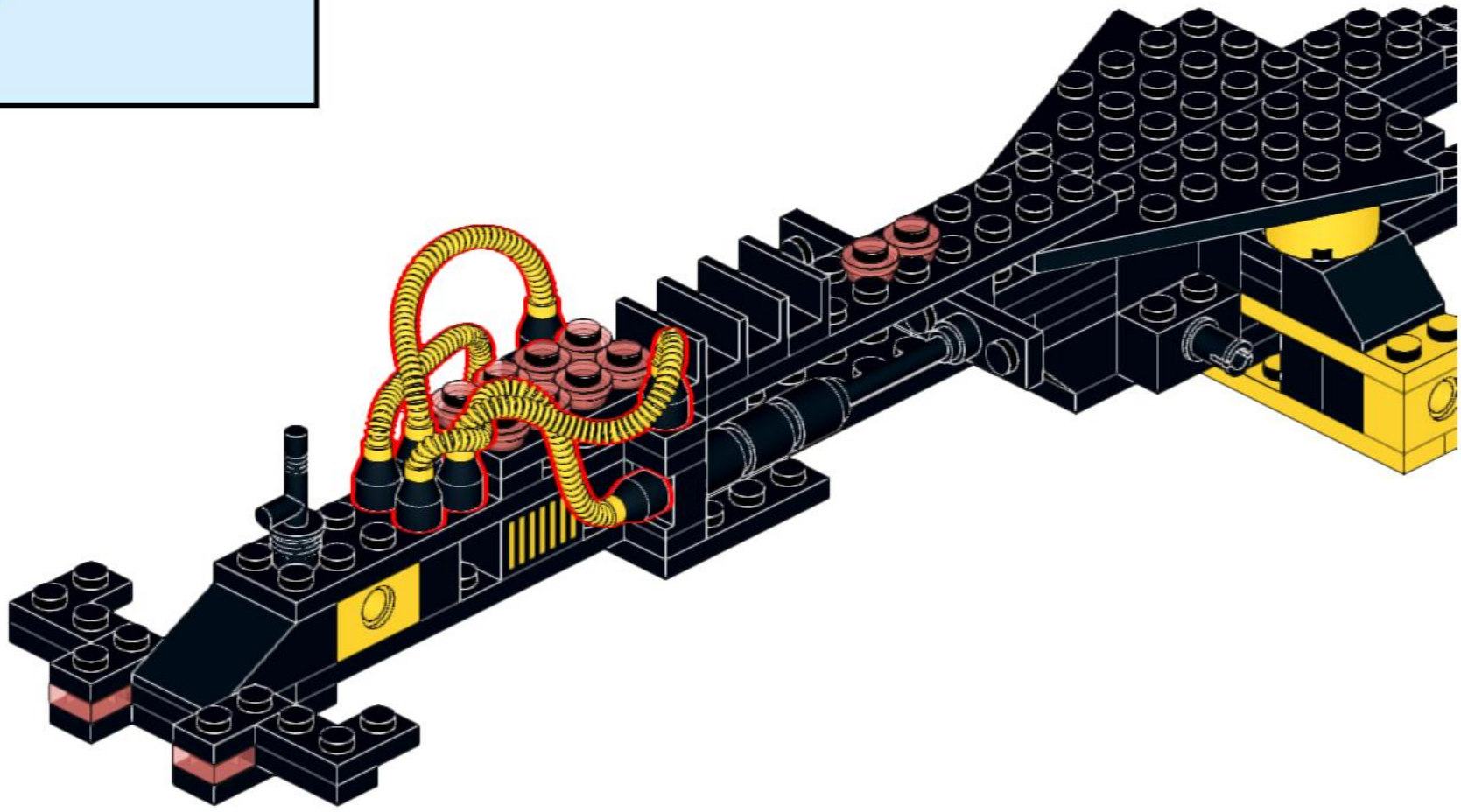

21



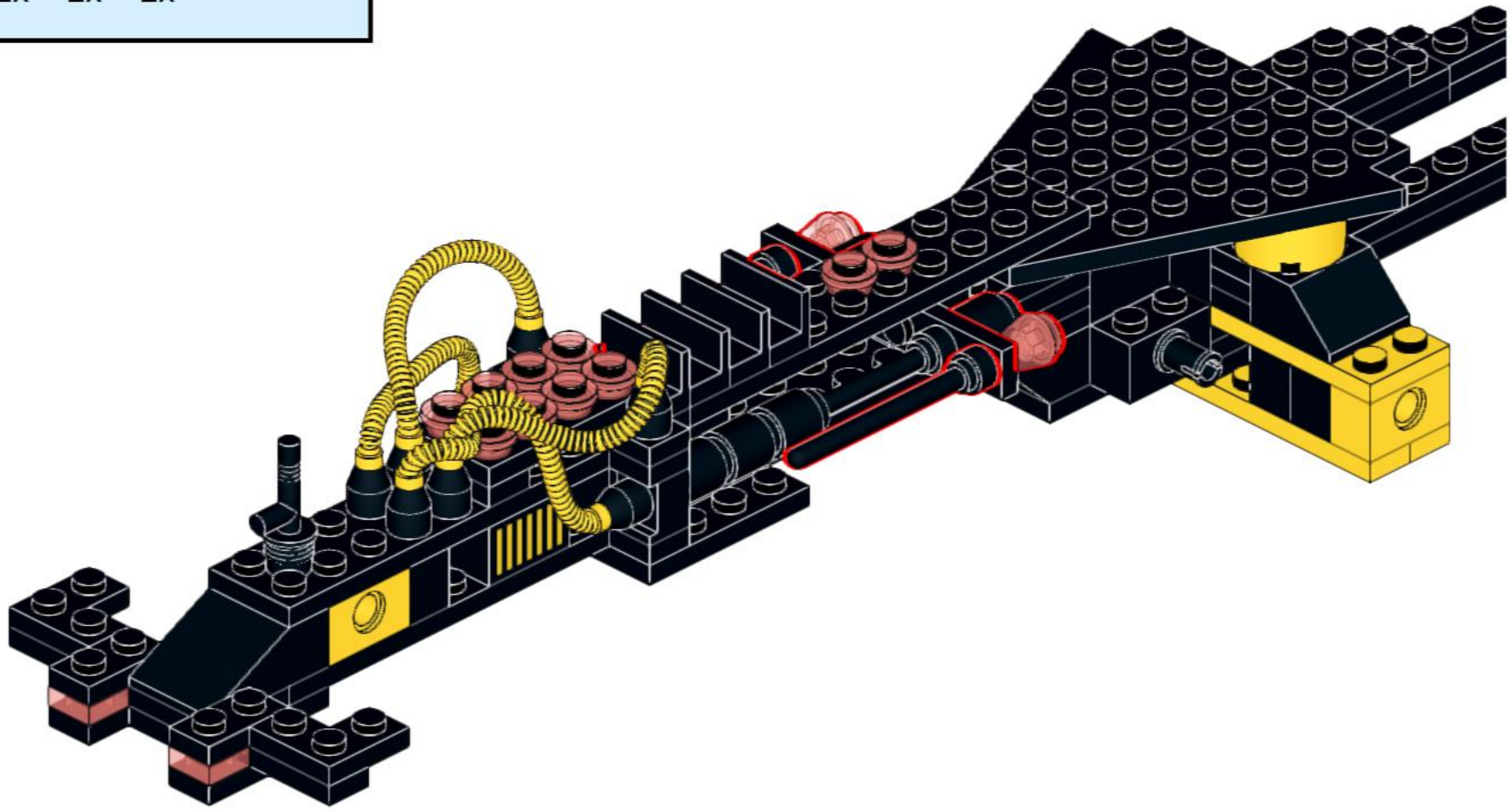

22

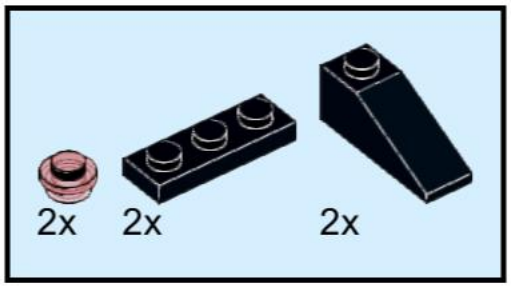

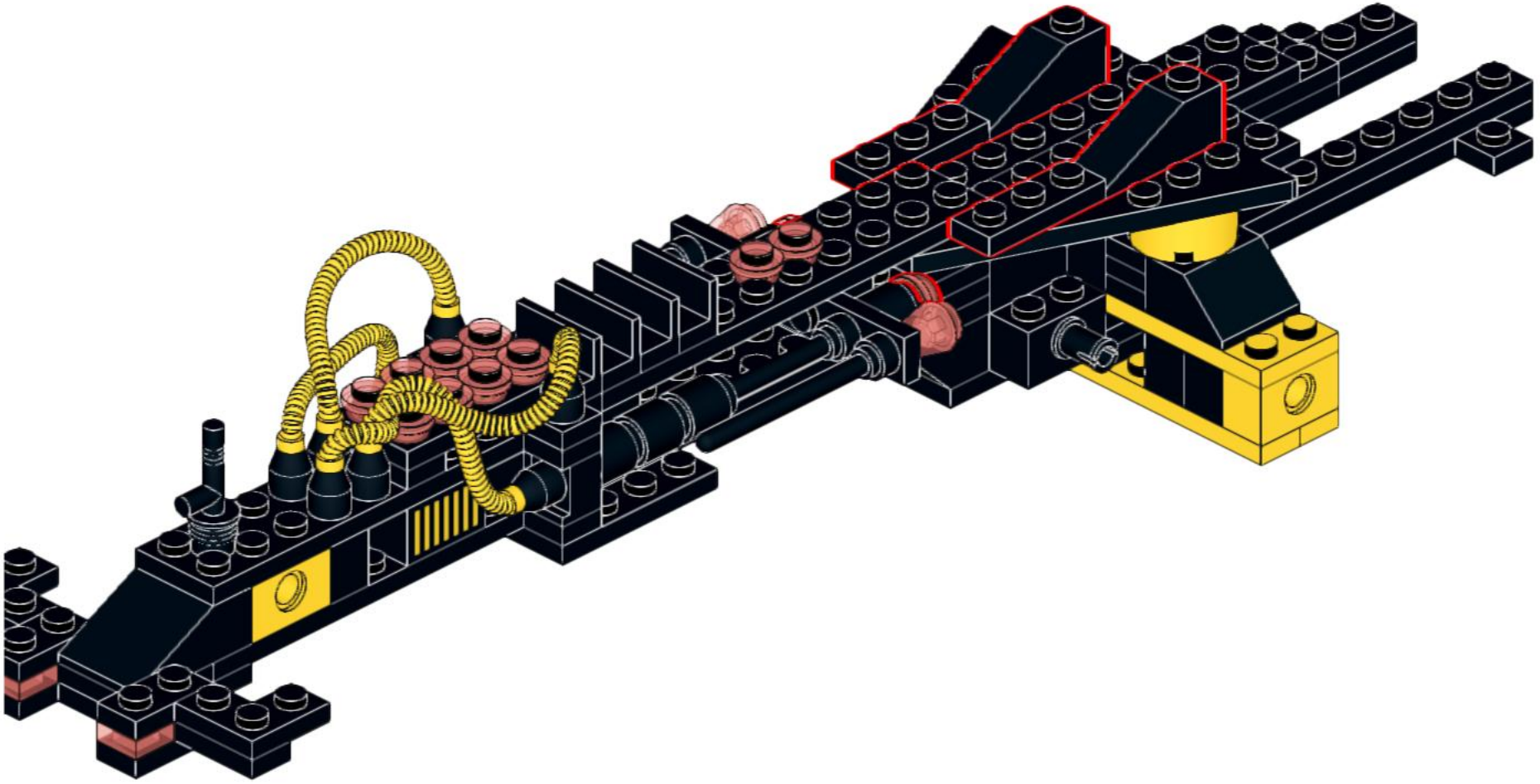

23

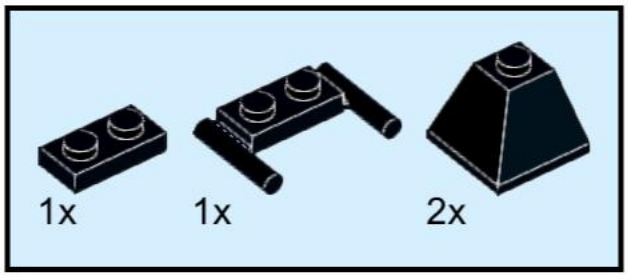

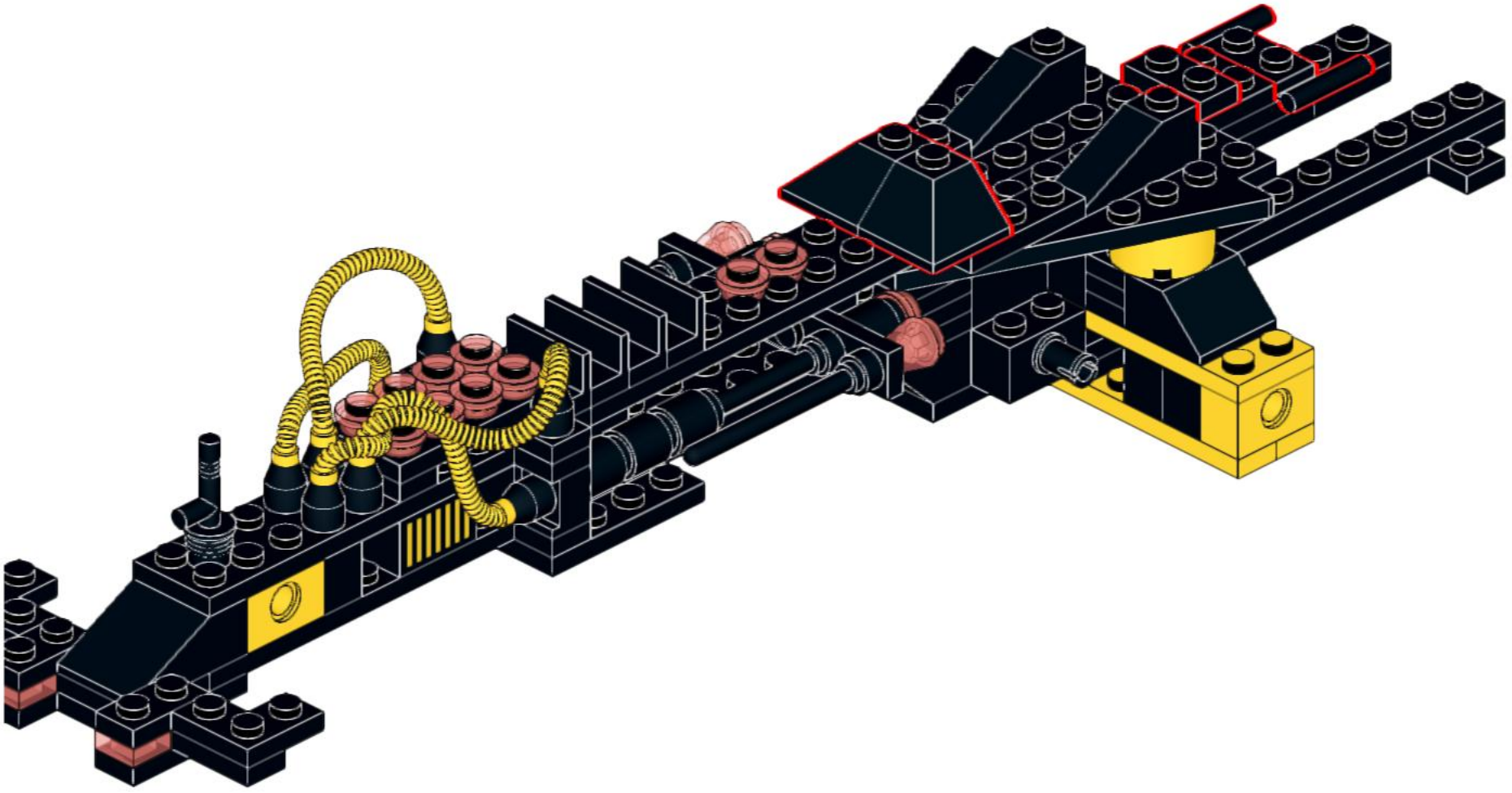

24

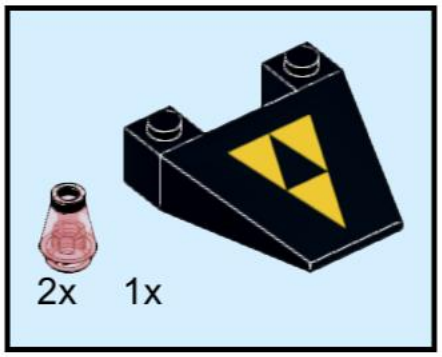

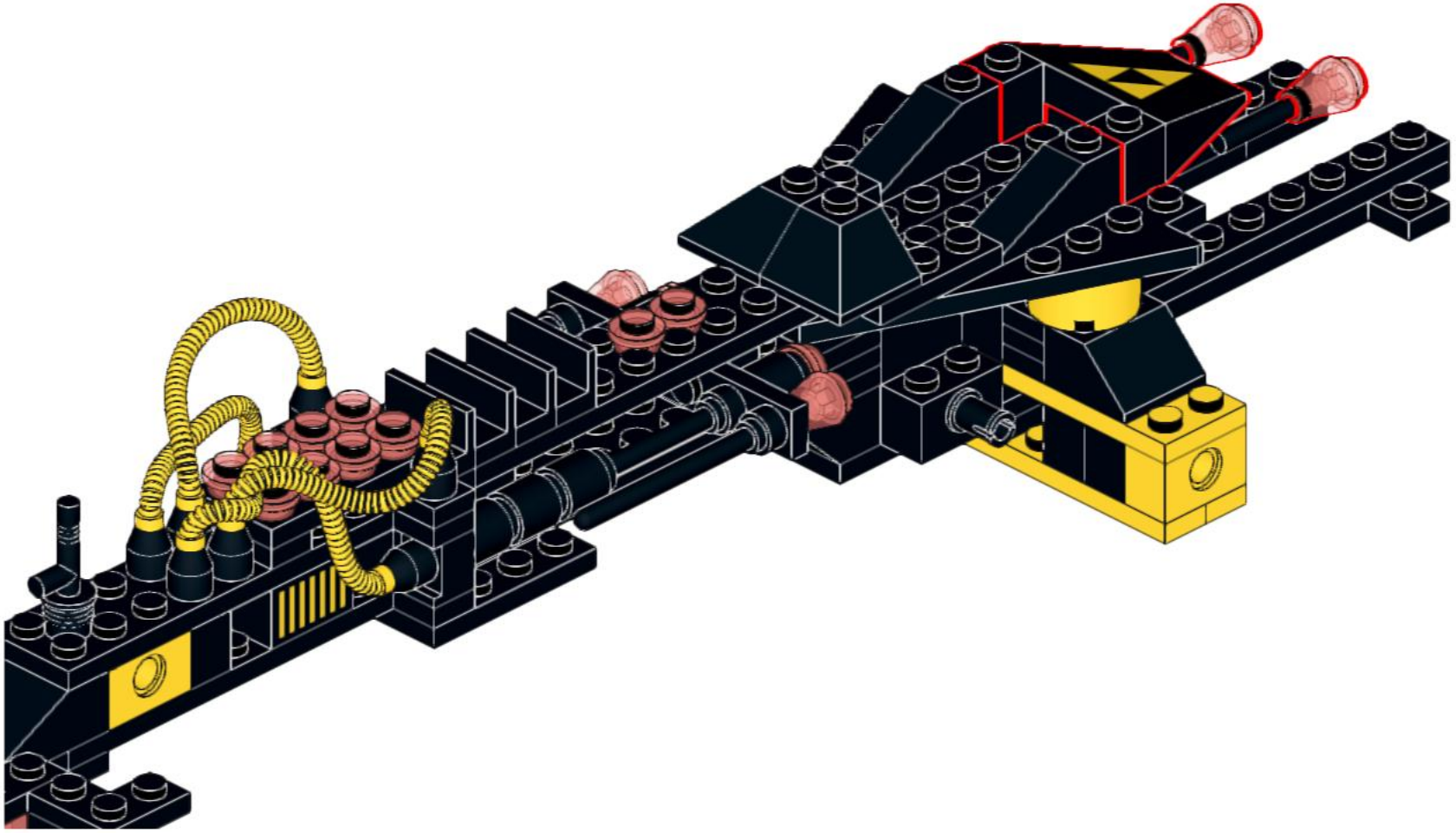

25

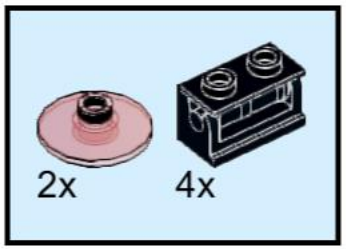

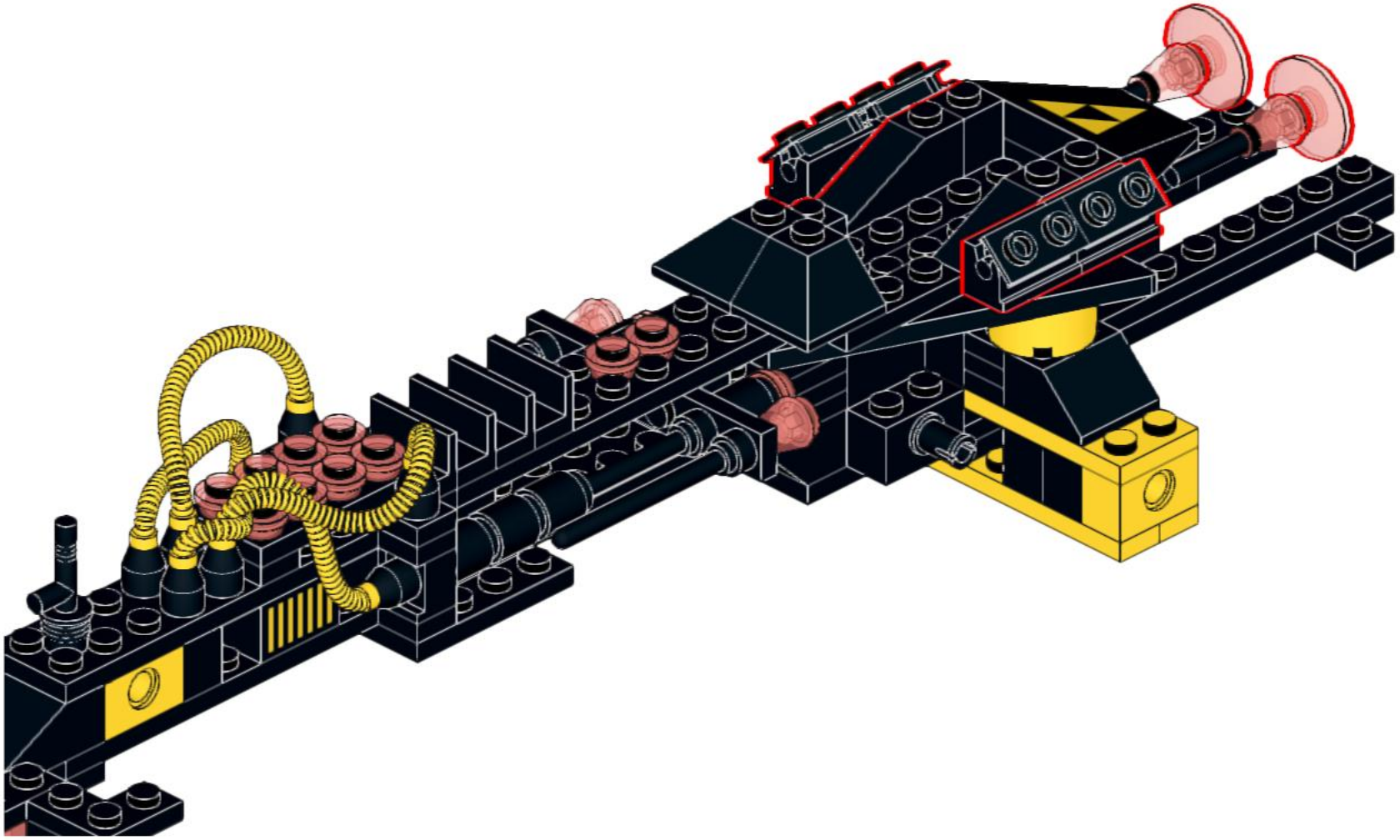

26

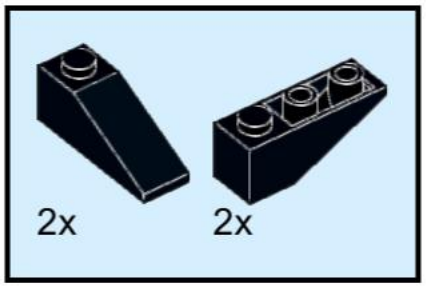

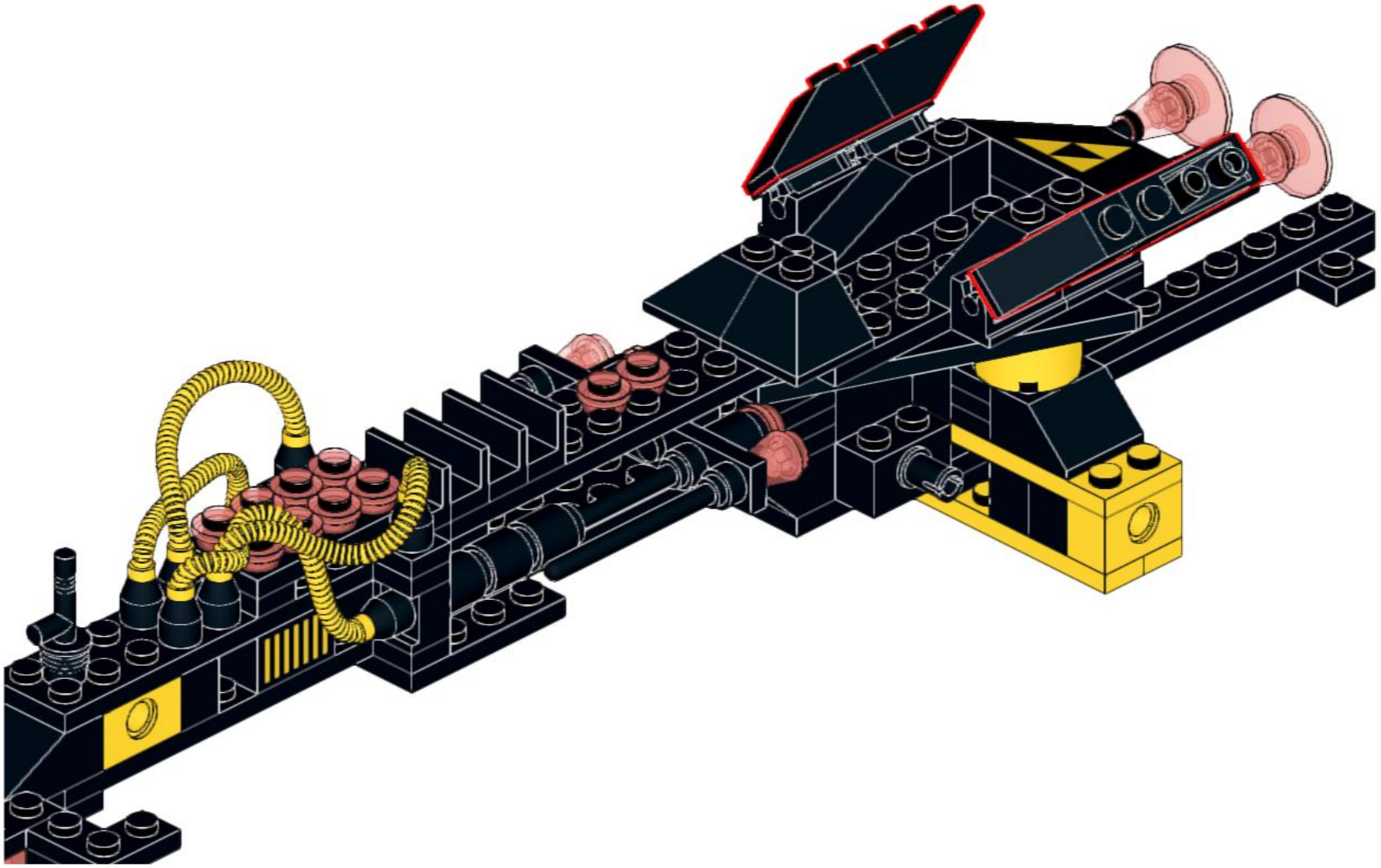

27

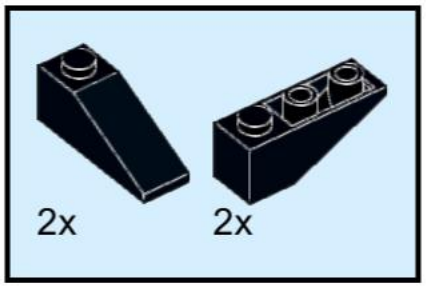

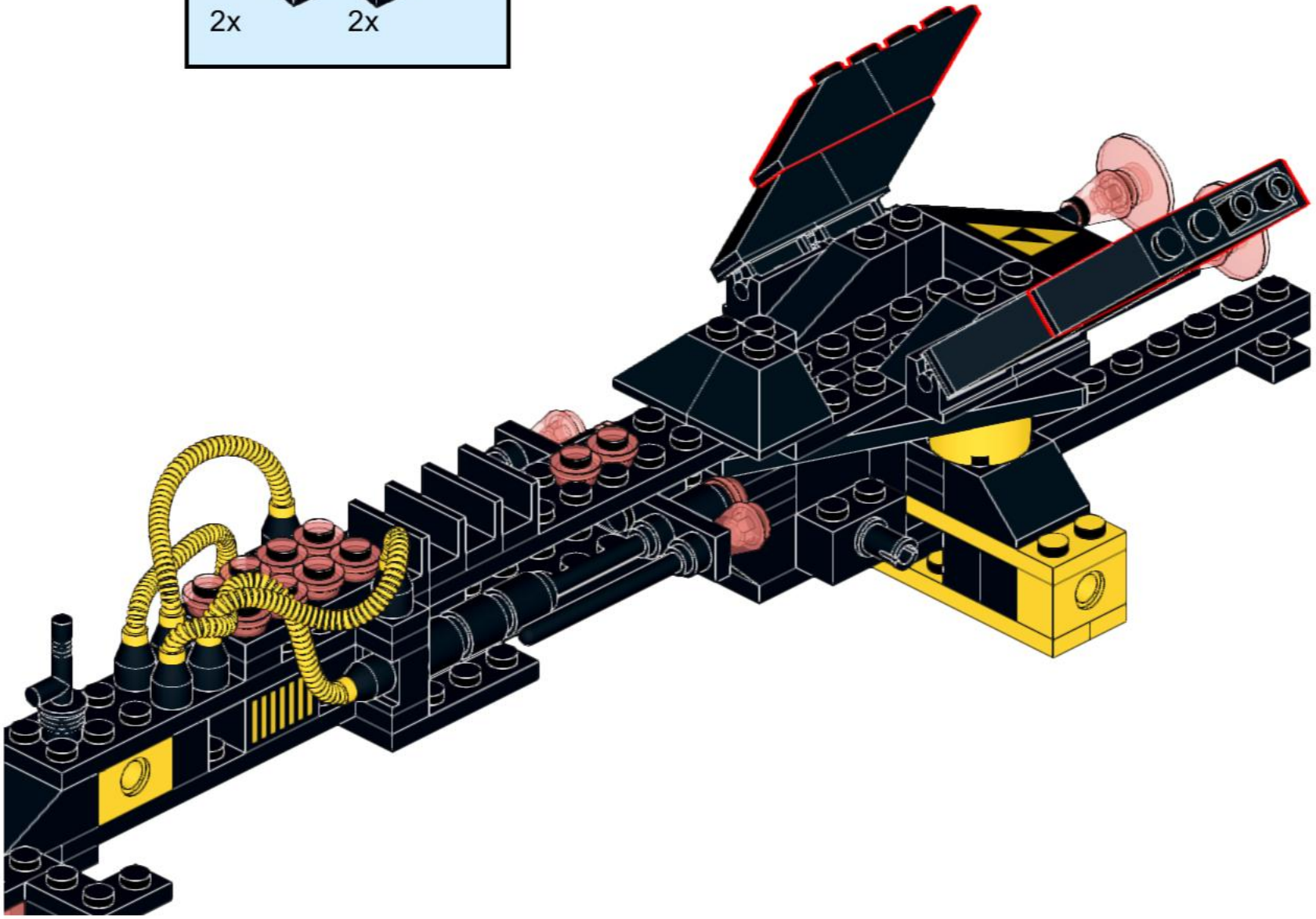

28

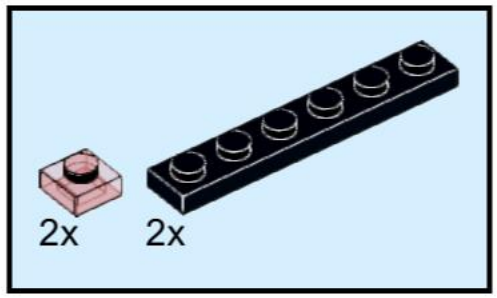

29

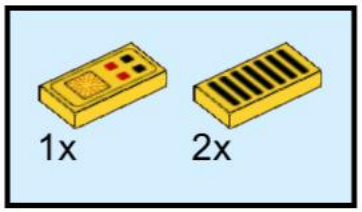

30

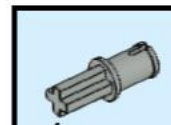

31

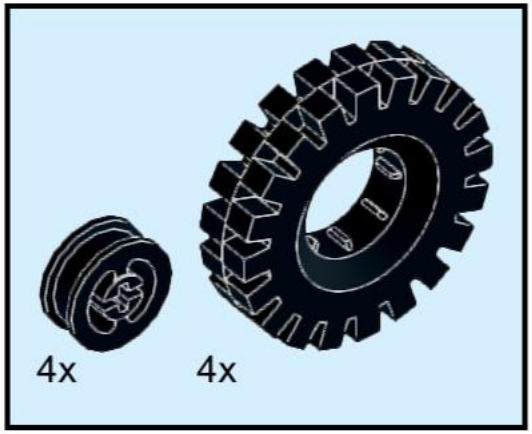

32

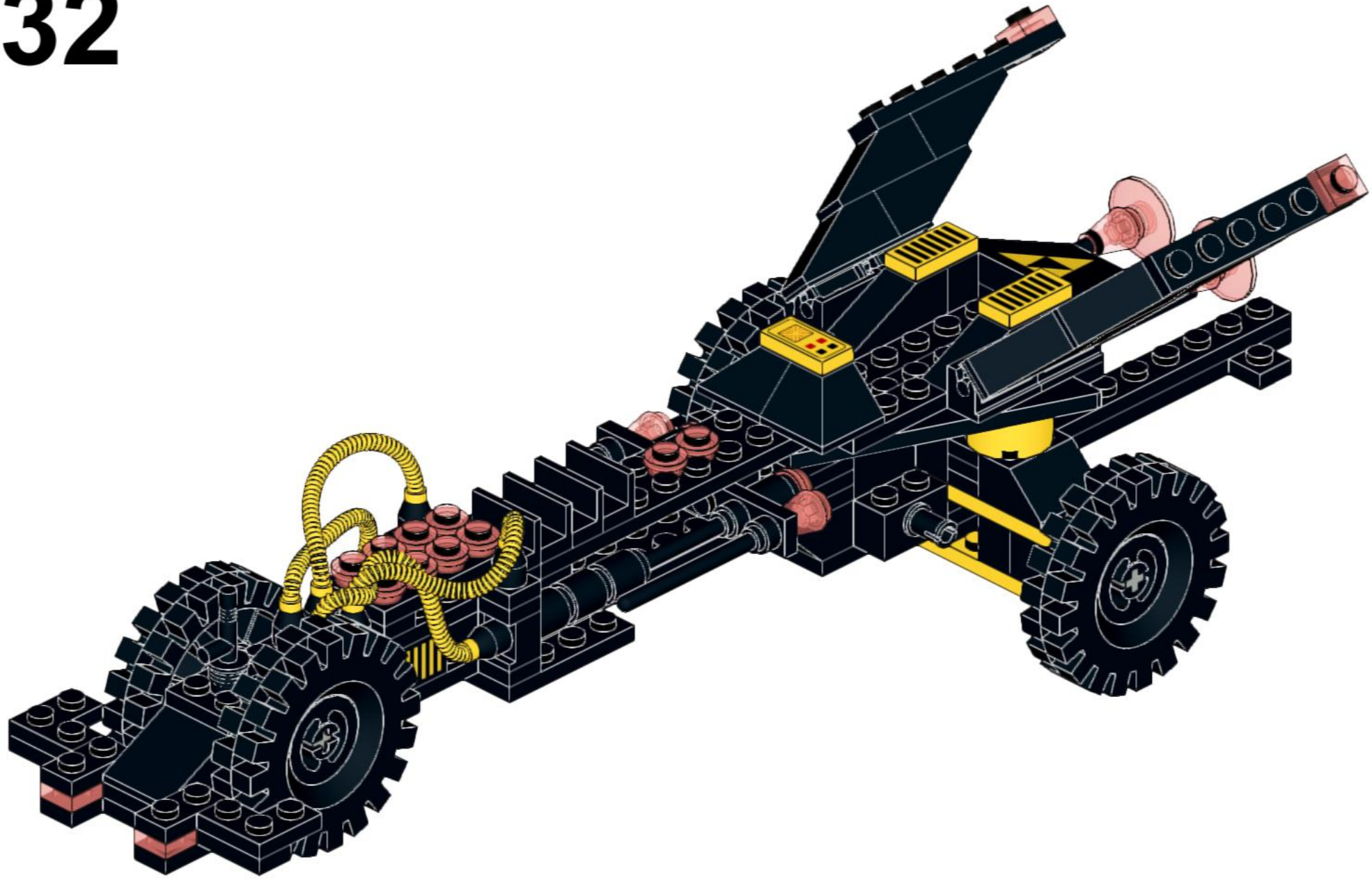



4x
3024
Black



8x
3062
Black



4x
4070
Black



9x
3023
Black



4x
4865
Black



2x
3004p05
Black

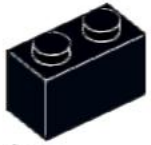

6x
3004
Black



4x
3022
Black



4x
2420
Black



4x
3937c01
Black



1x
3959
Black



2x
3039
Black



2x
3045
Black



2x
3660
Black

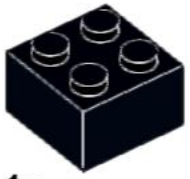

1x
3003
Black



4x
3482
Black



2x
3623
Black

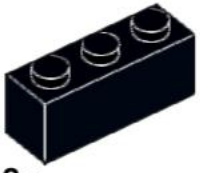

2x
3622
Black



6x
4286
Black

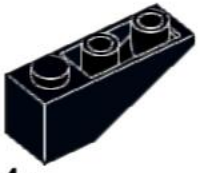

4x
4287
Black



1x
3839b
Black



4x
3021
Black



1x
3298
Black

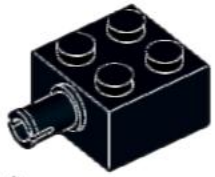

2x
4730
Black



1x
3710
Black



2x
3020
Black



4x
3957
Black



1x
3031
Black

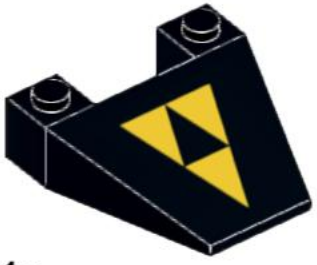

1x
4858p01
Black



3x
3666
Black



3x
3795
Black



1x
3034
Black



1x
3933a
Black



4x
3634
Black



1x
3934a
Black



2x
4477
Black



3x
3460
Black



3x
3832
Black



4x
3749
Light Gray



1x
3069p25
Yellow



2x
3069p05
Yellow

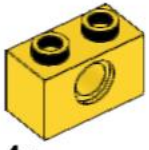

4x
3700
Yellow



2x
3941
Yellow



4x
73590c03b
Yellow

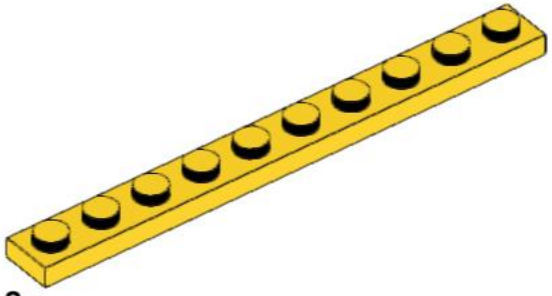

2x
4477
Yellow

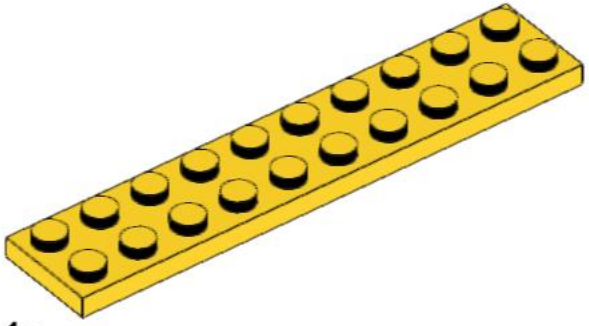

1x
3832
Yellow



4x
3024
Trans-Red



12x
4073
Trans-Red



4x
4589
Trans-Red



2x
4740
Trans-Red