# 1

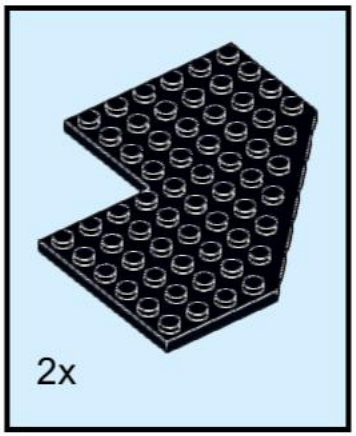


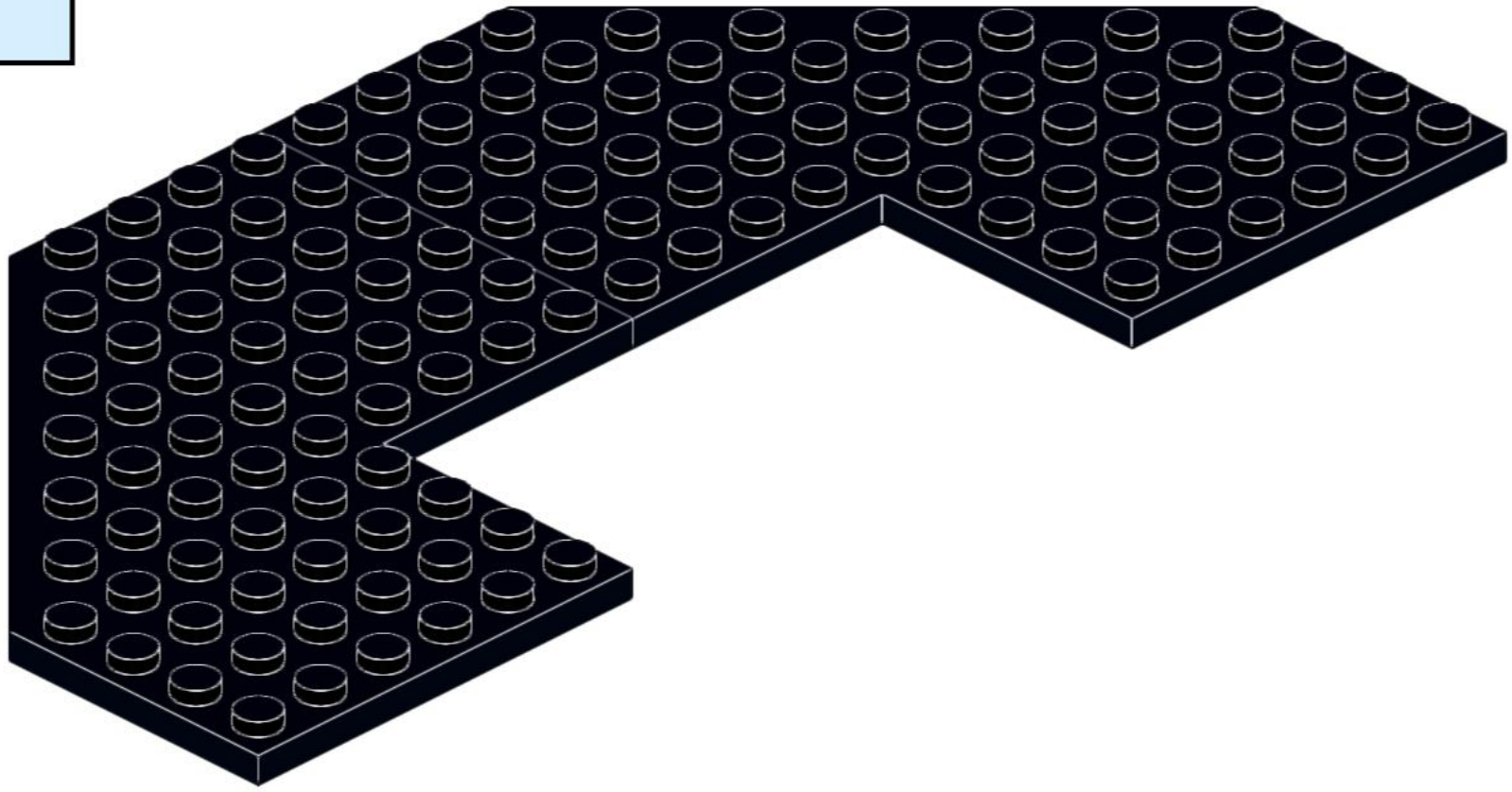

# 2

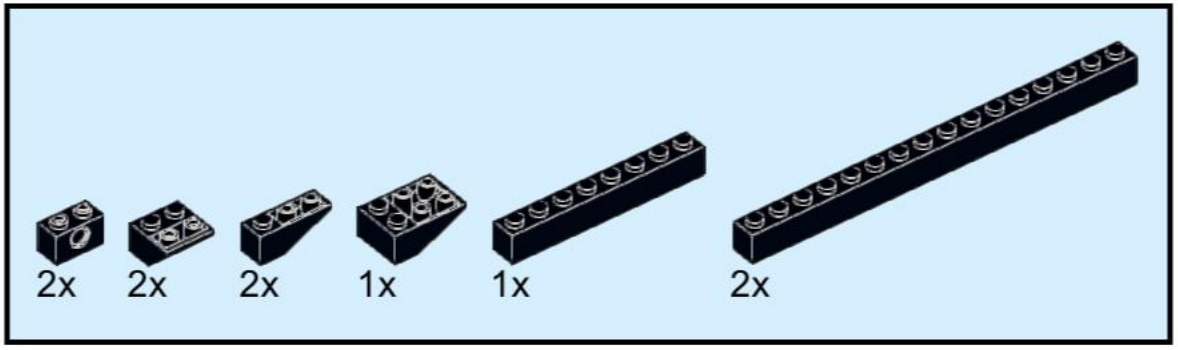




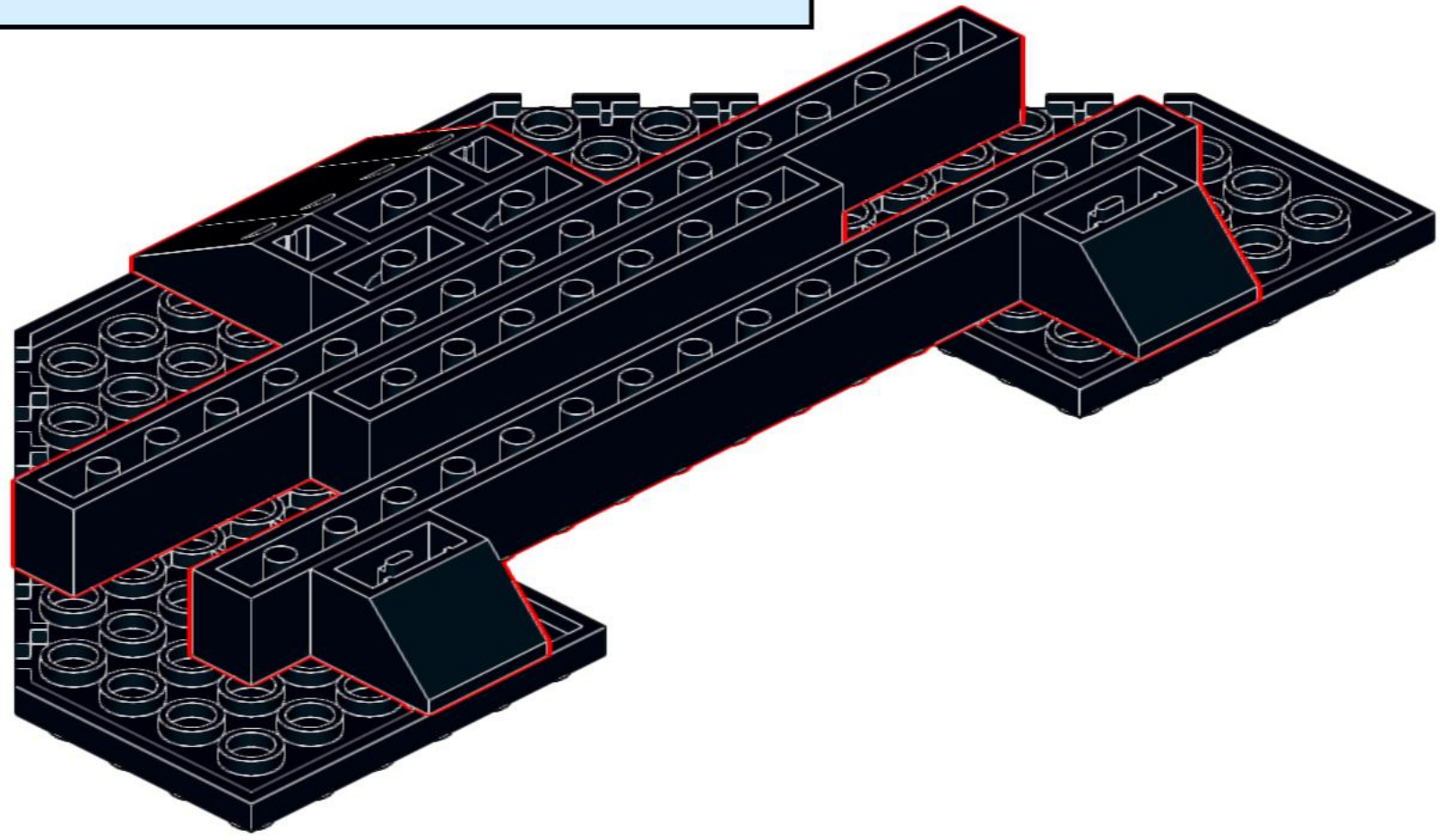

# 3

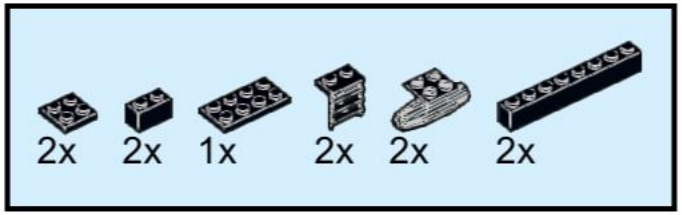


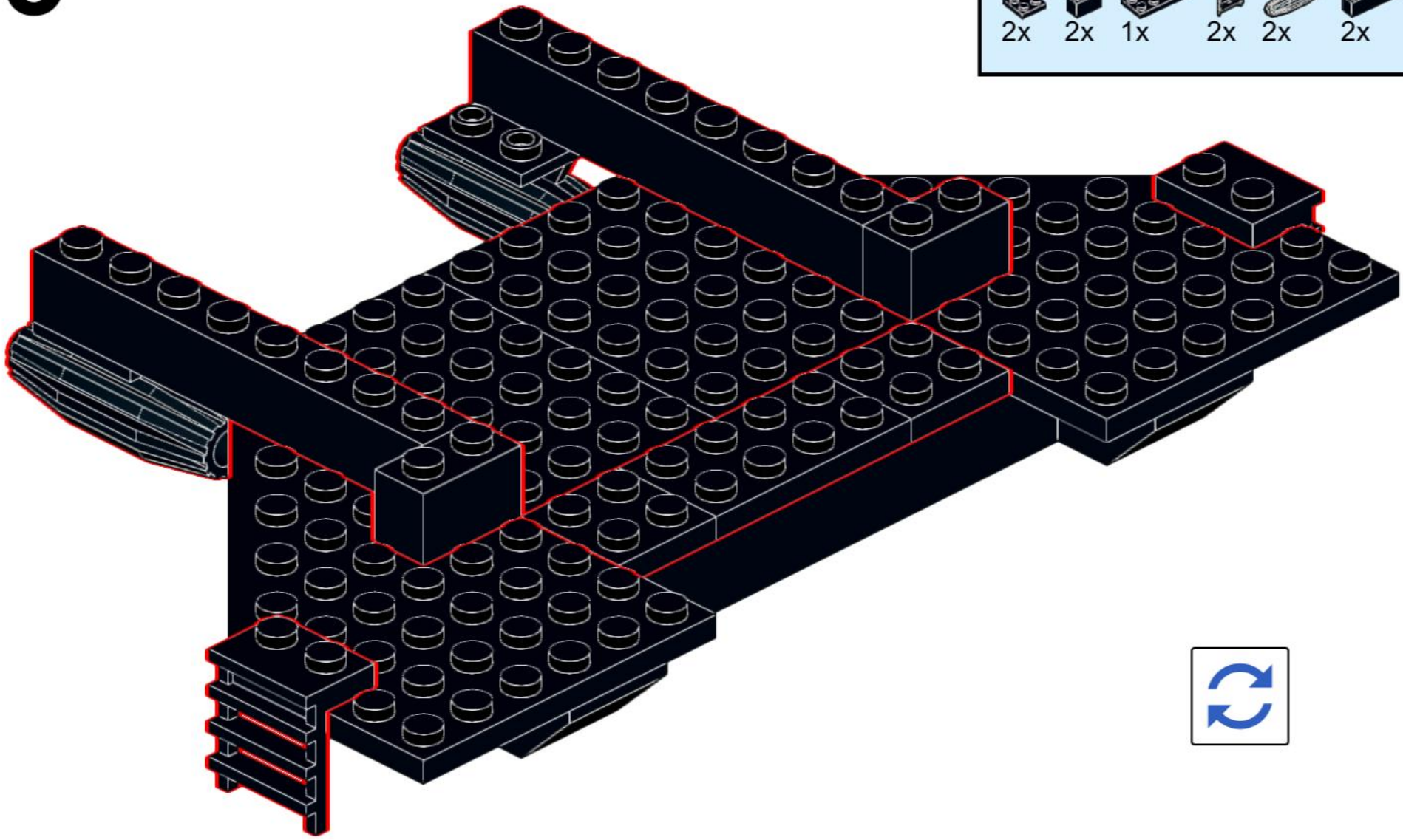

# 4

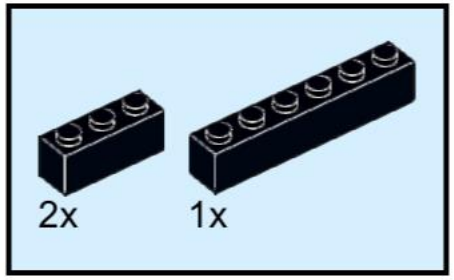


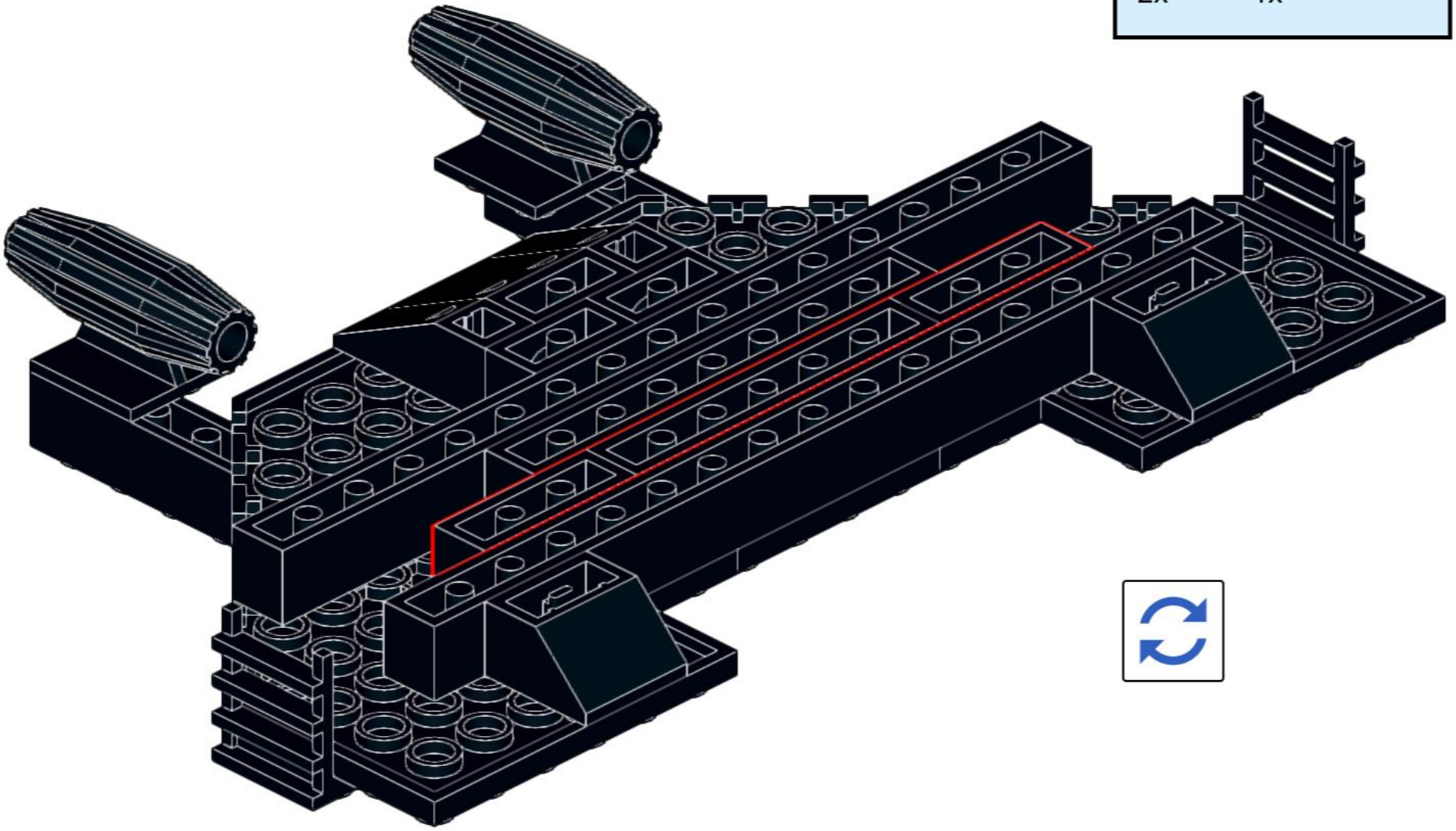

# 5

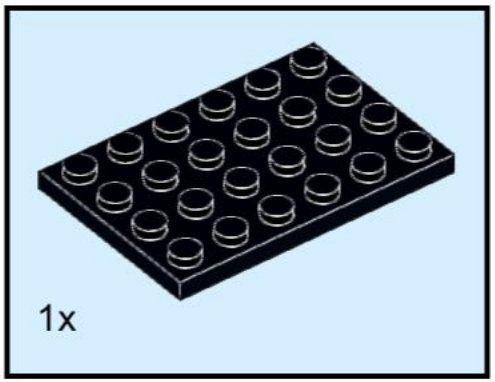

# 6

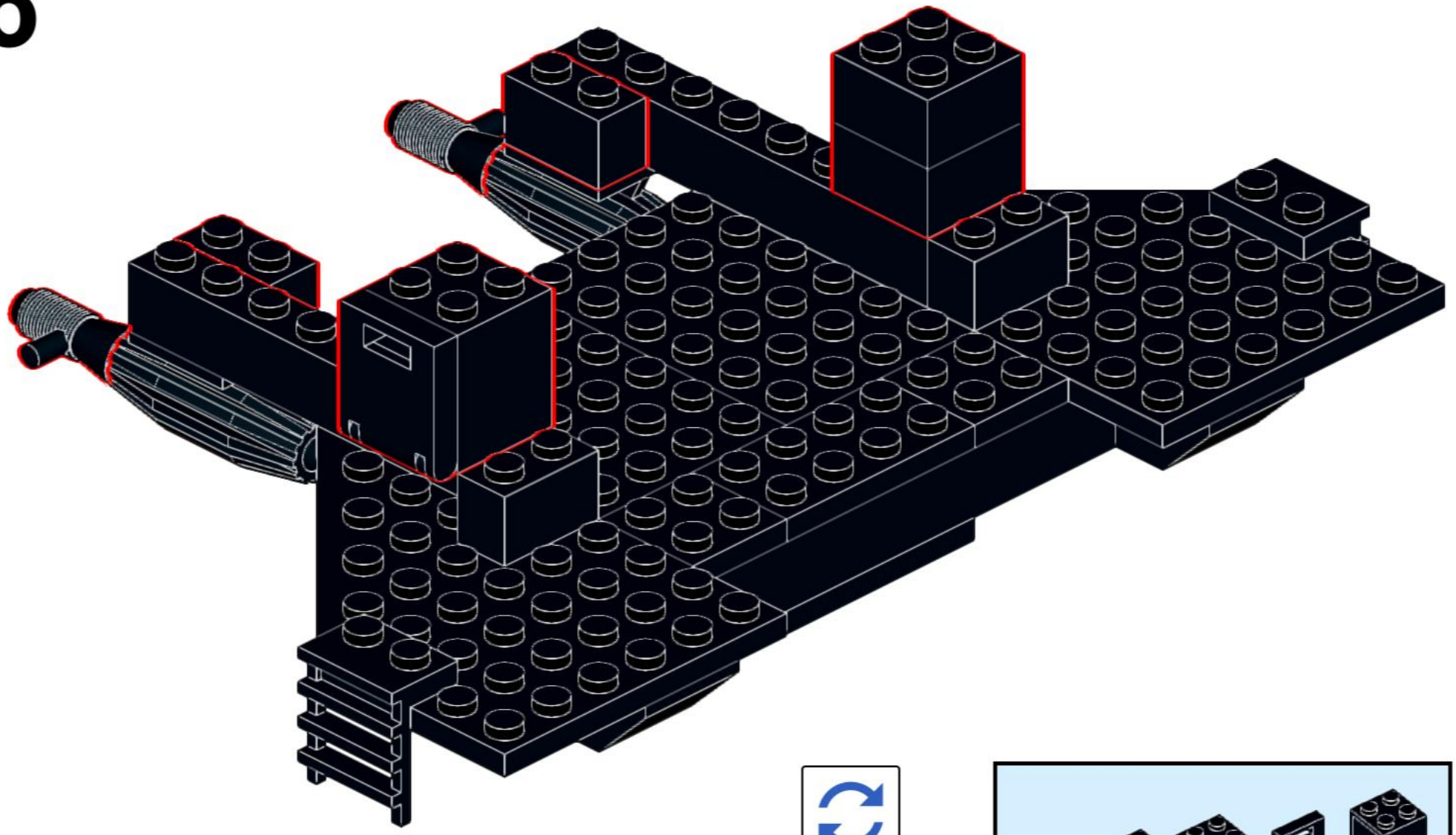



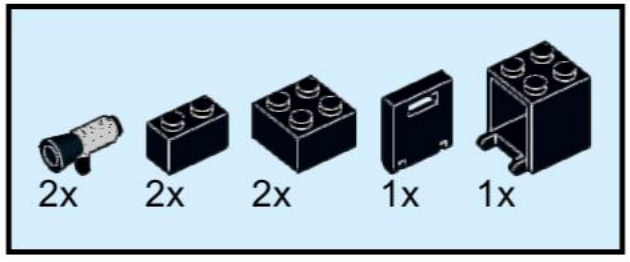

# 7

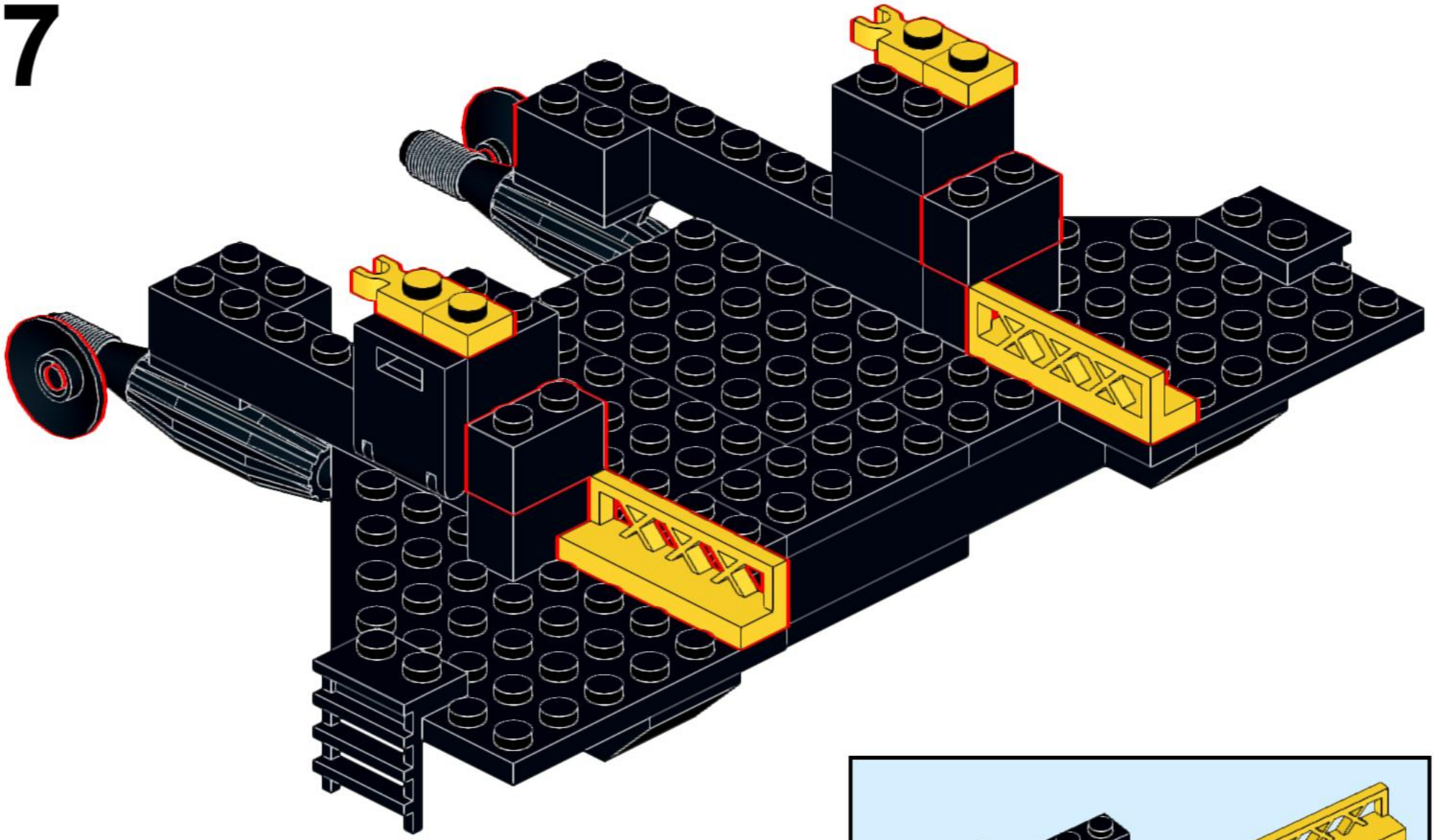

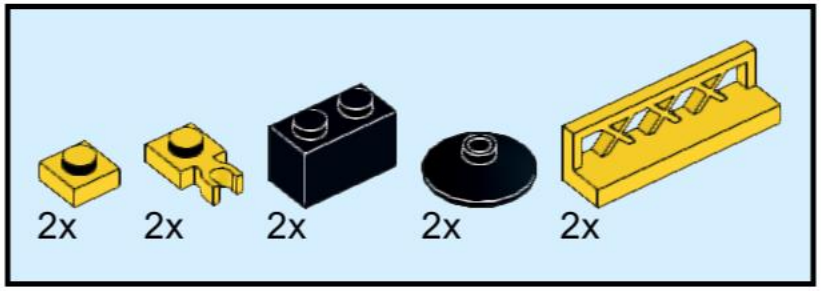

# 8

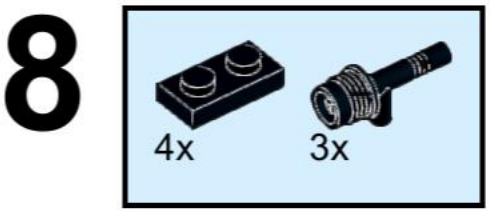

# 9

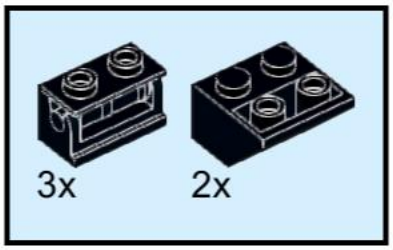

# 10

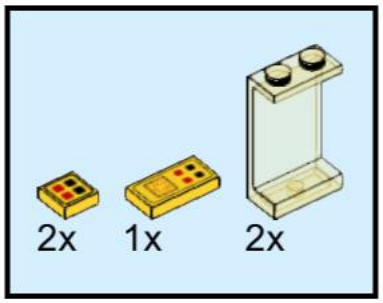

# 11

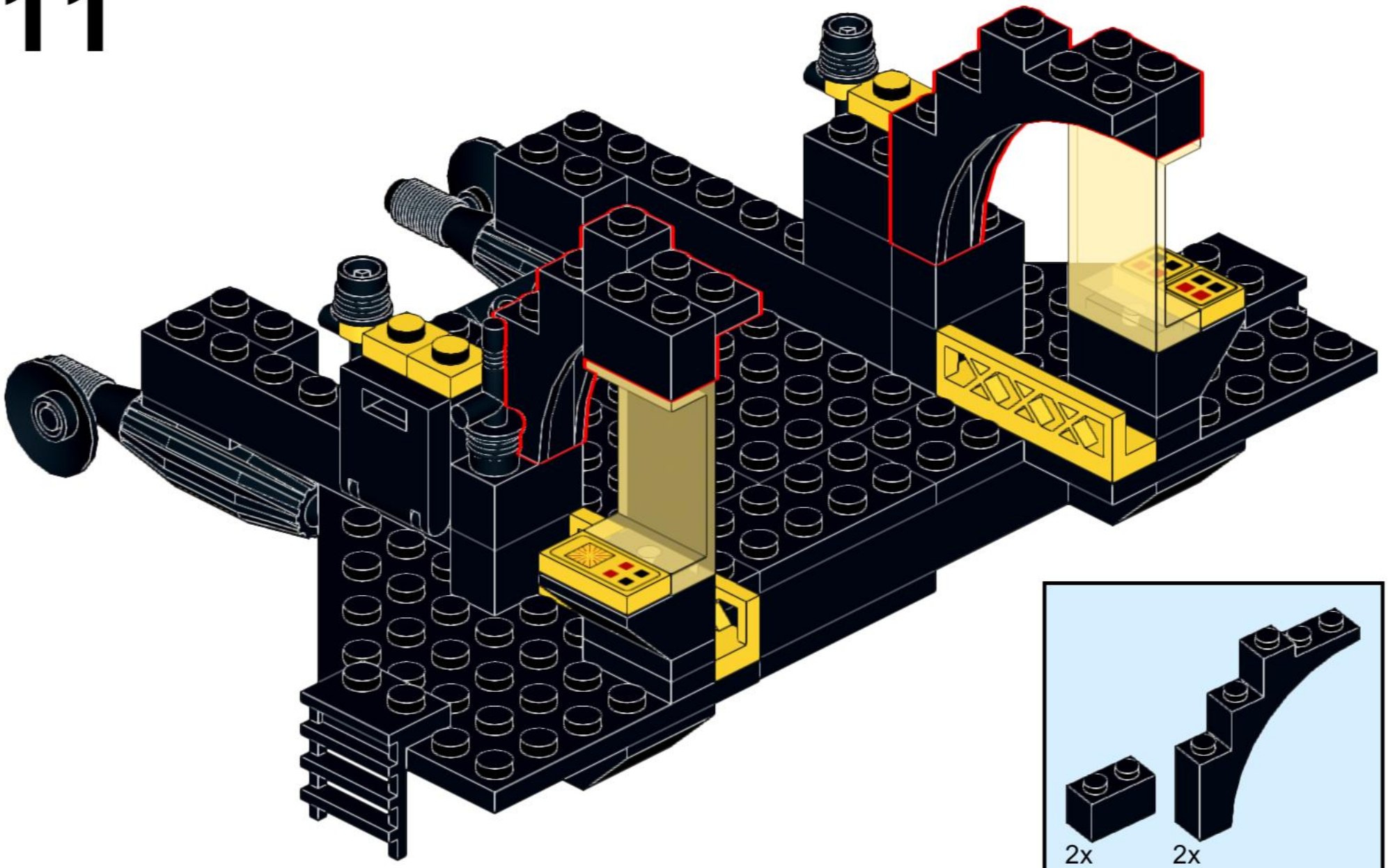

# 12



# 13

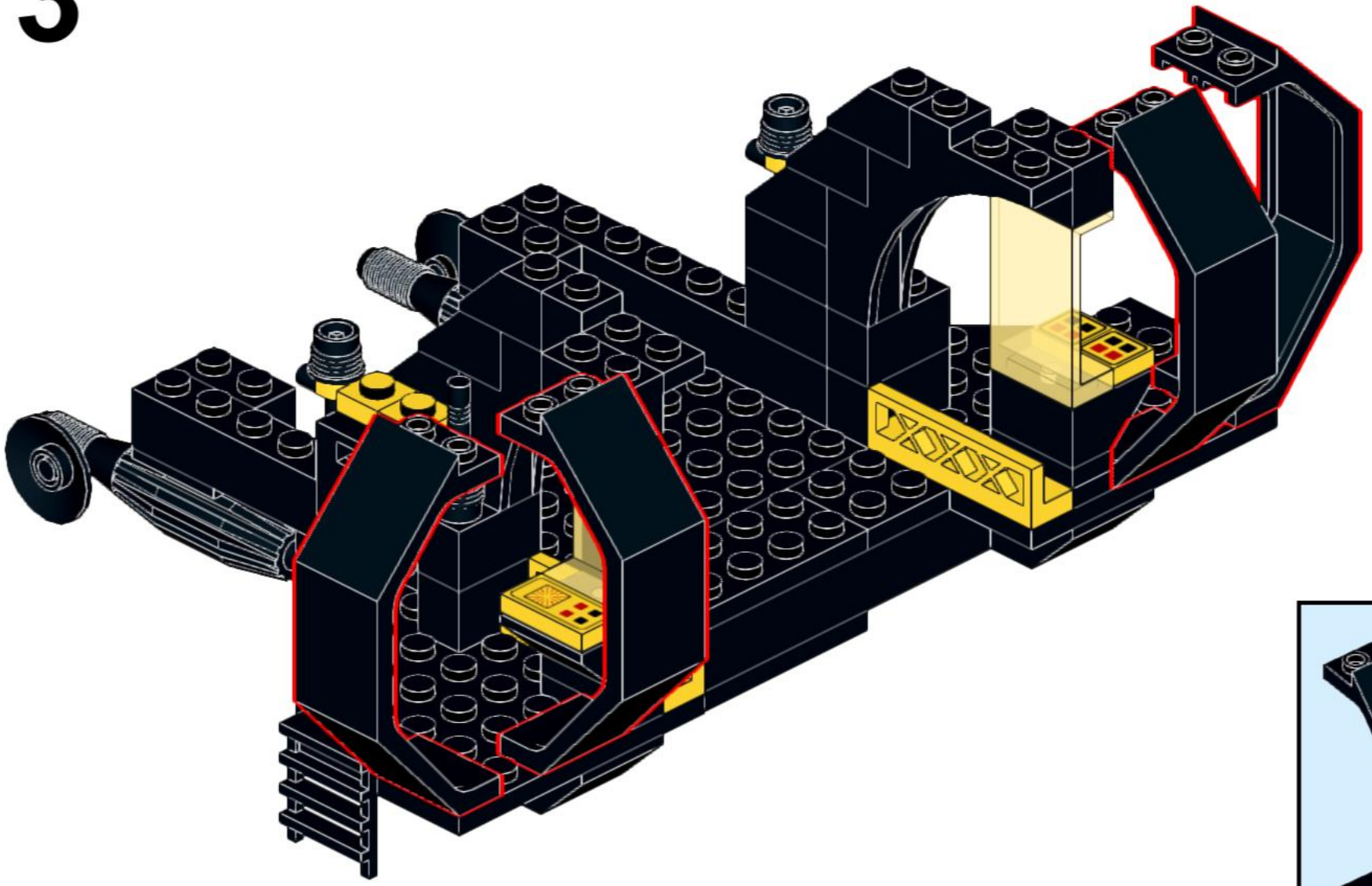

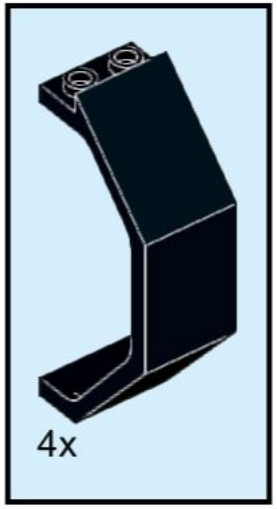

# 14

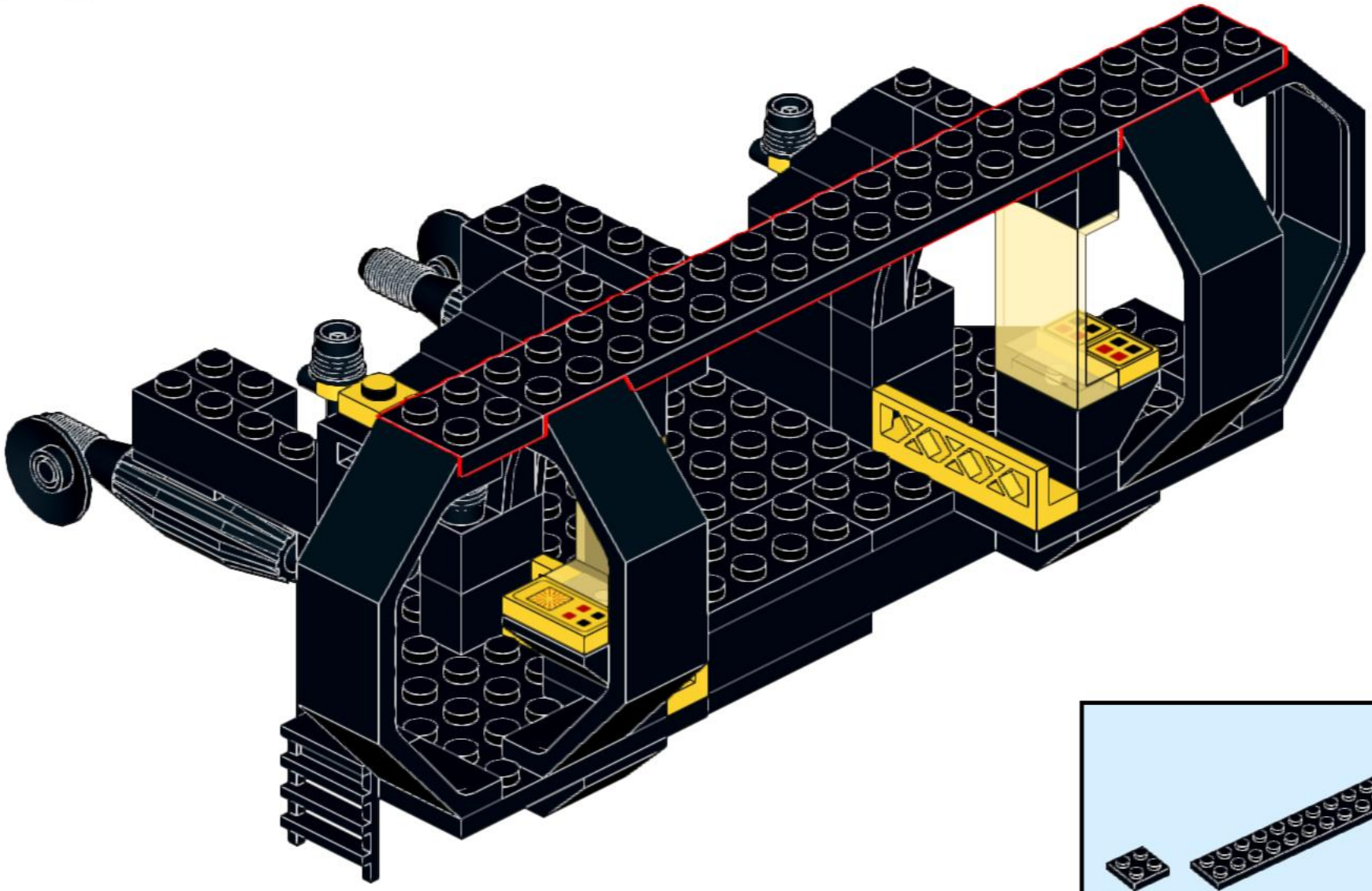

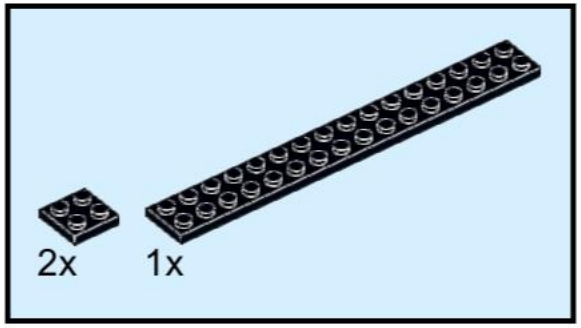

# 15

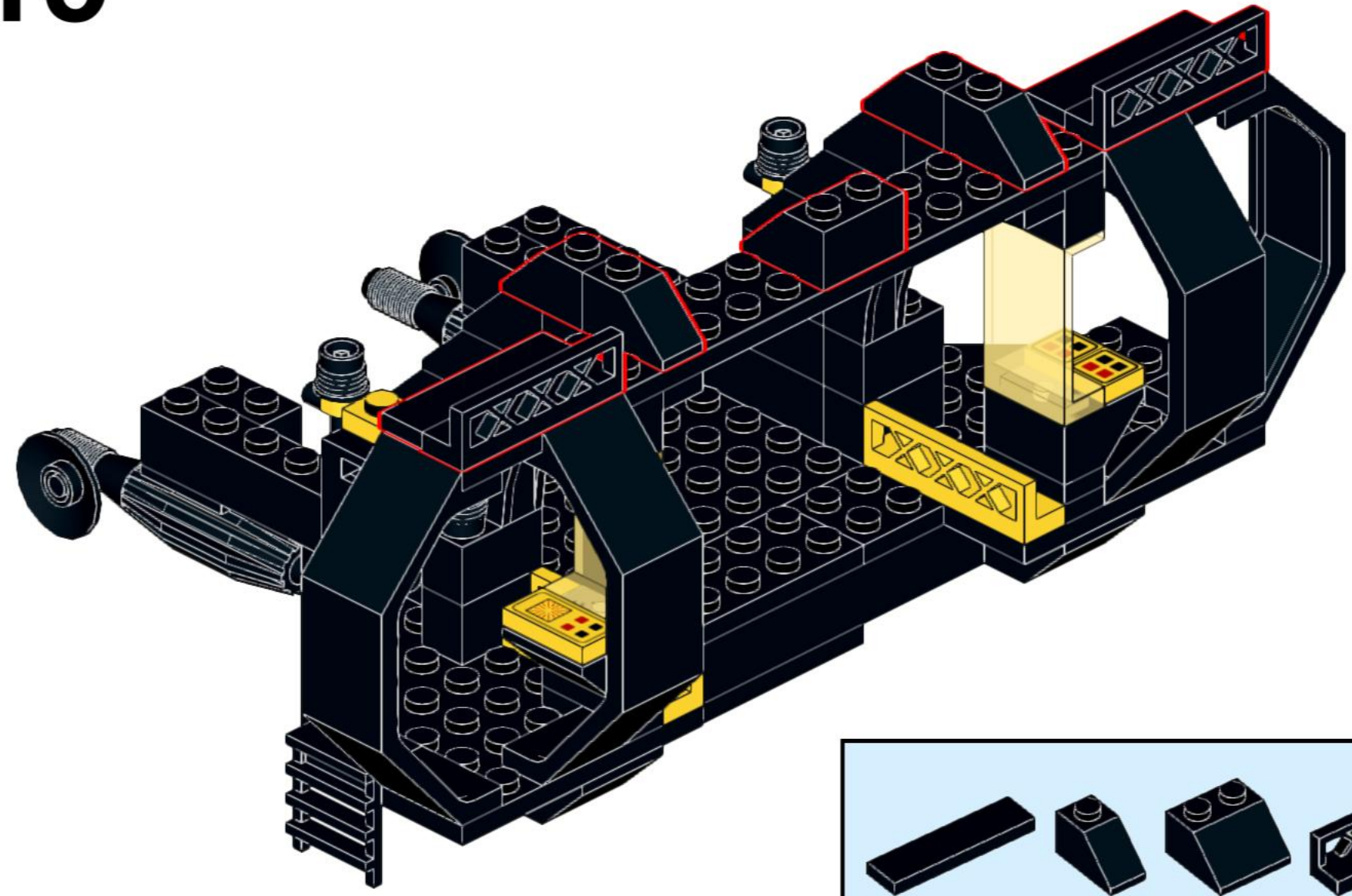

# 16

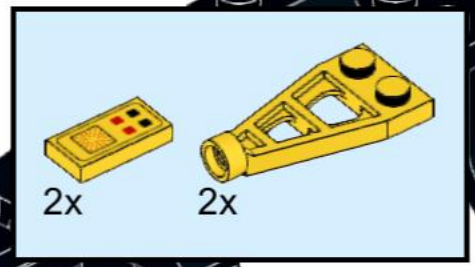

# 17

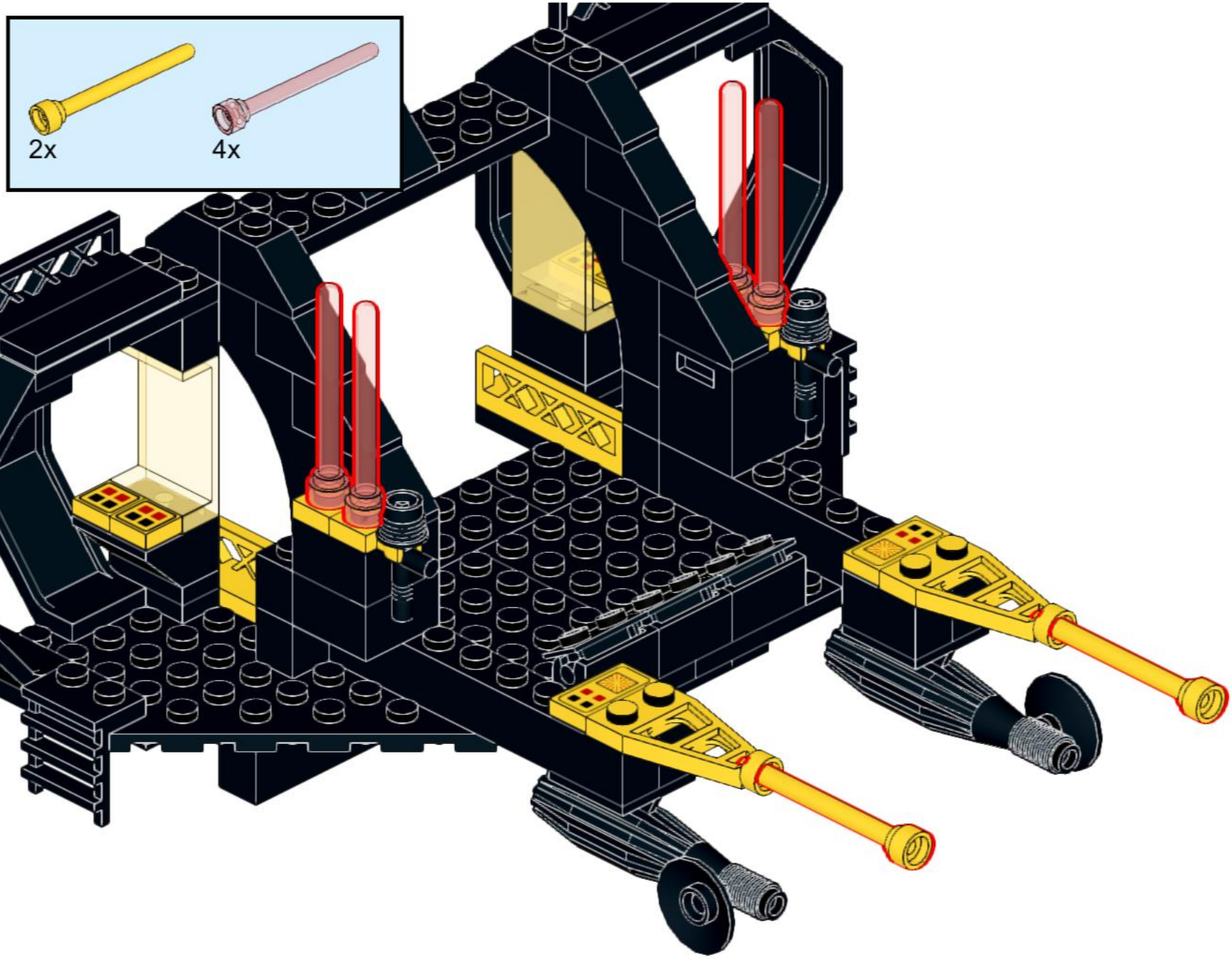

# 18

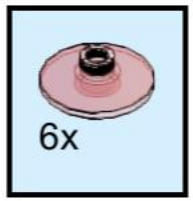

# 19

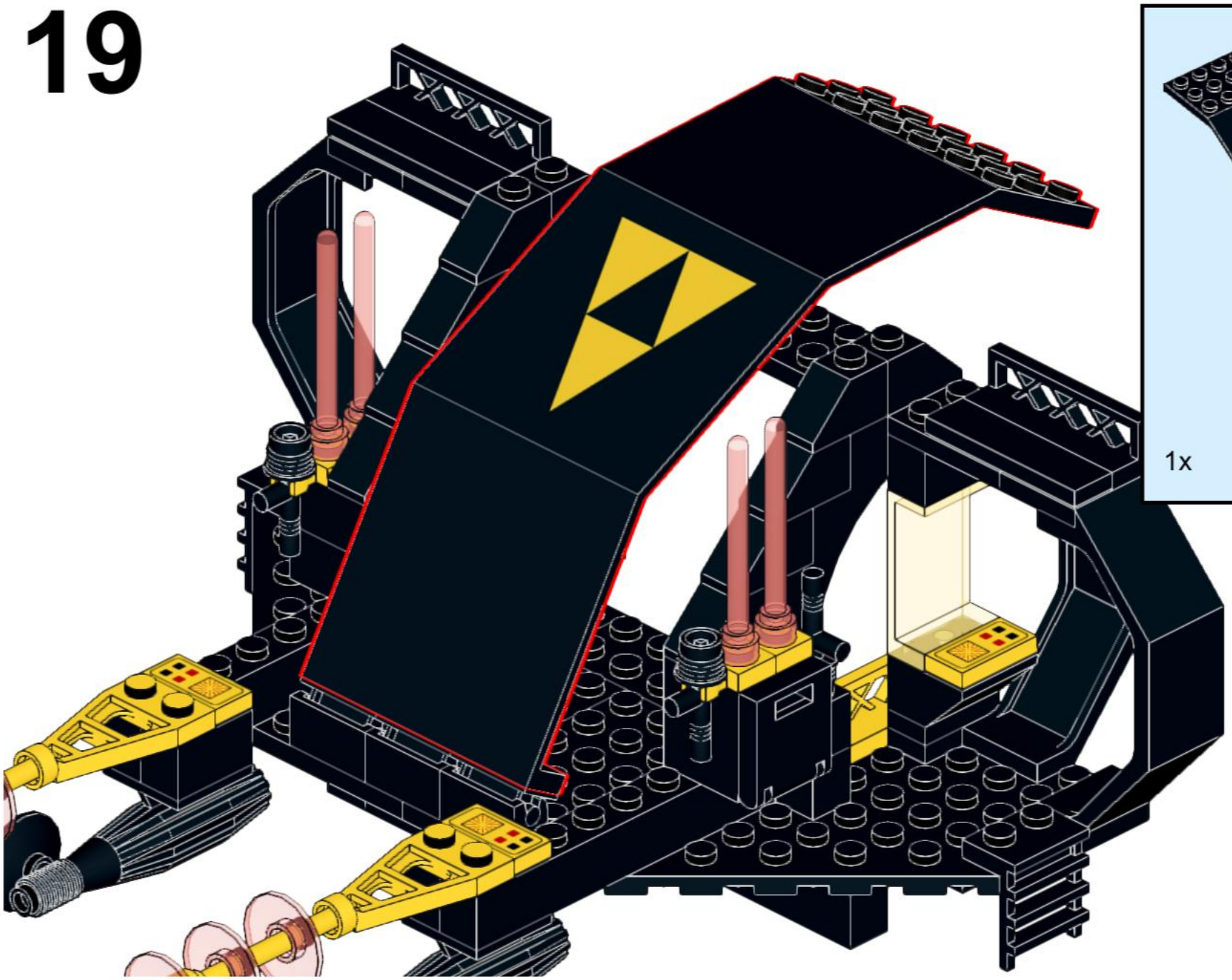

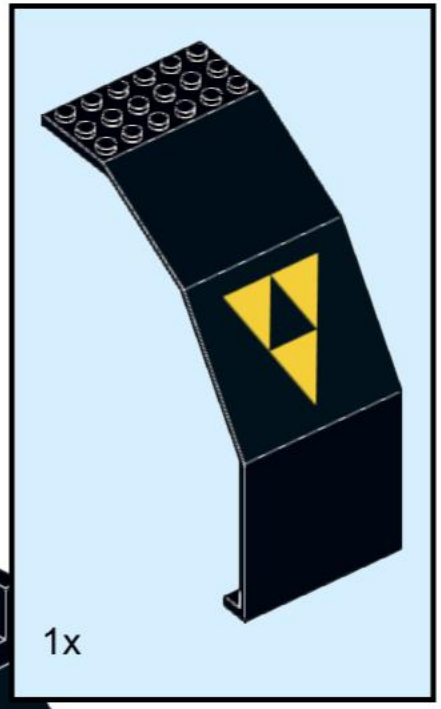

# 20

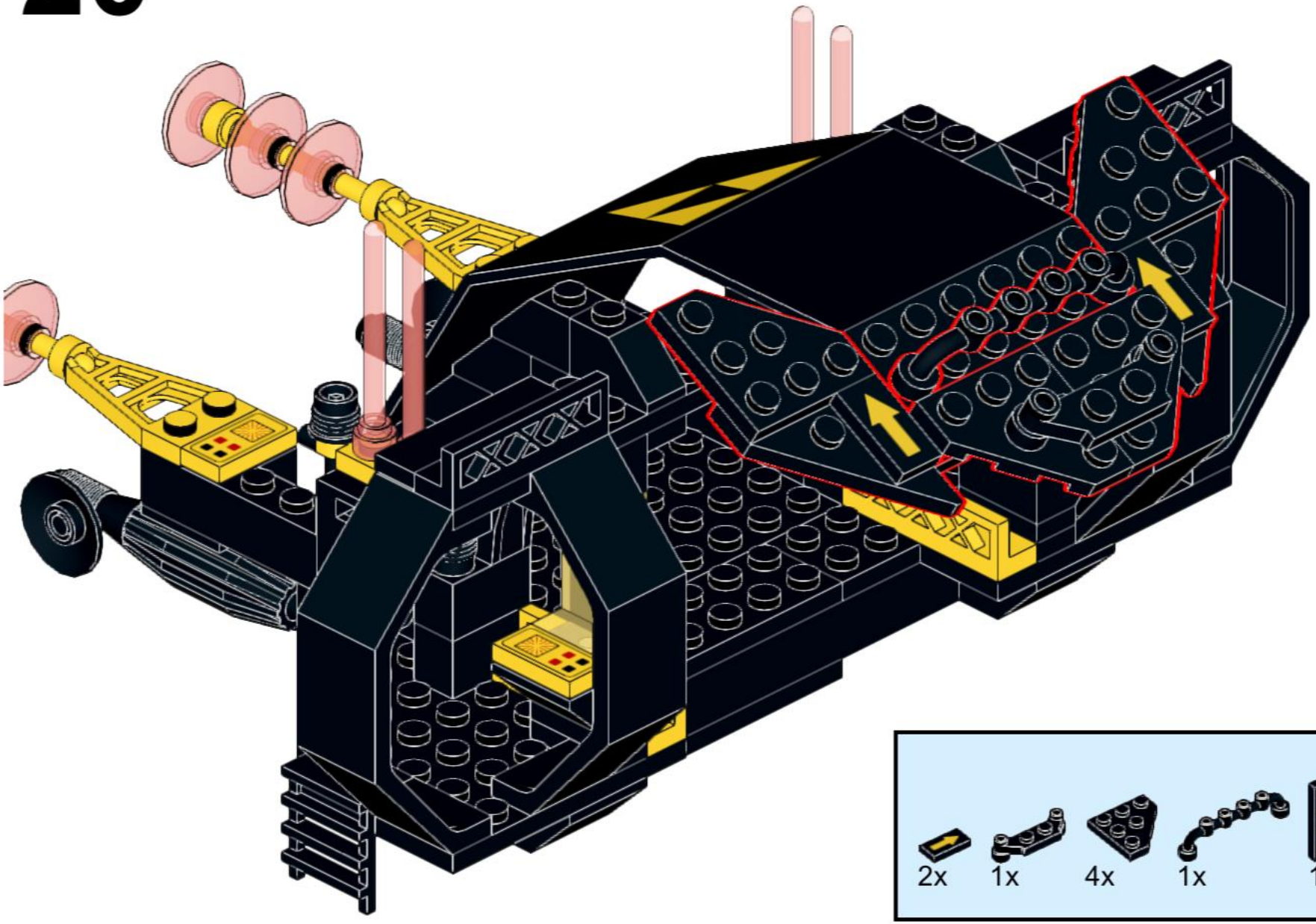

# 21

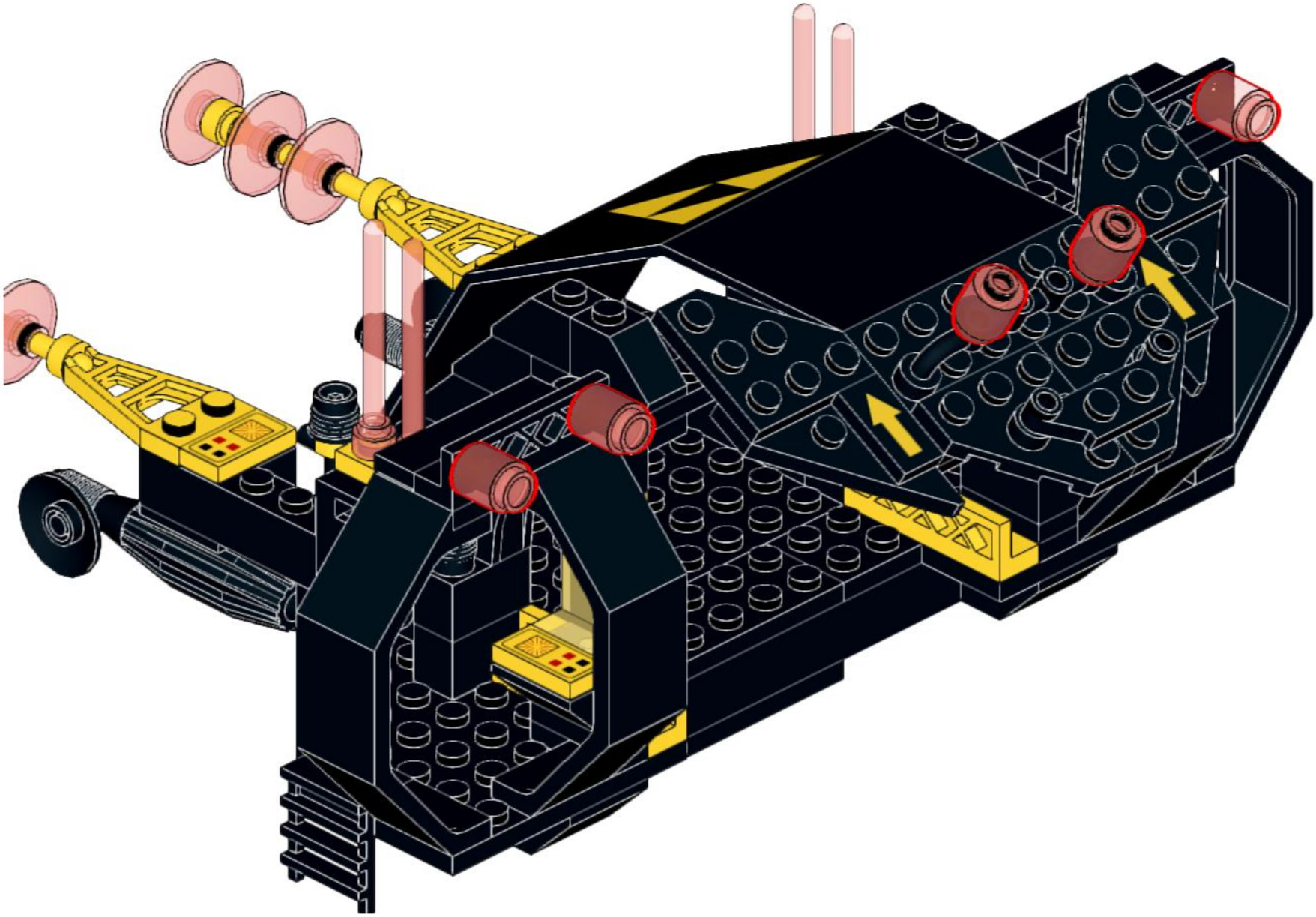

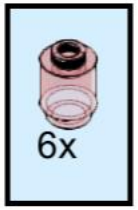

# 22

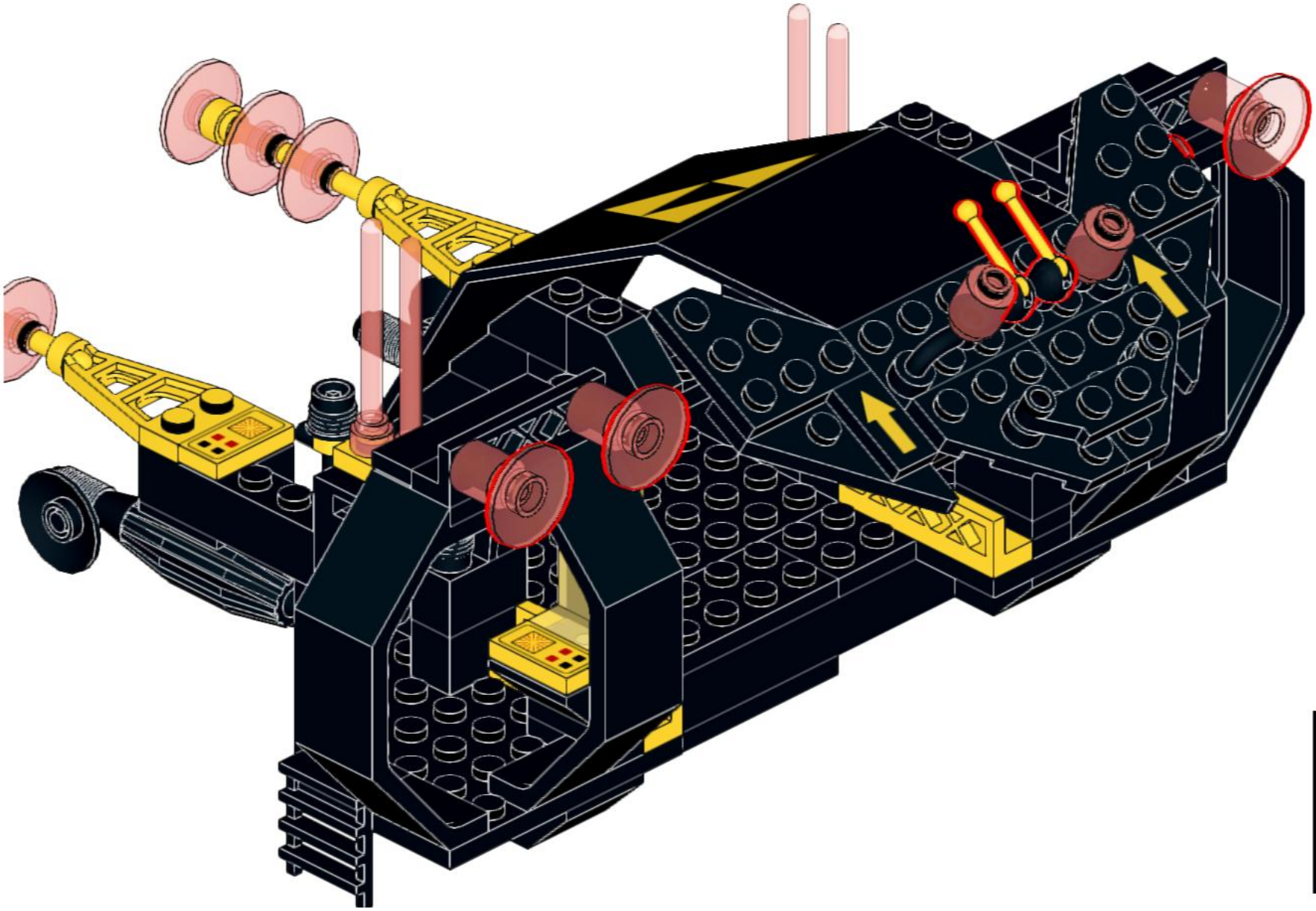

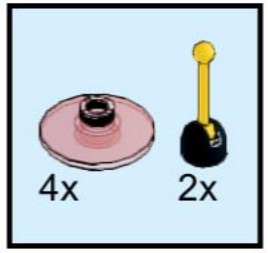

# 23

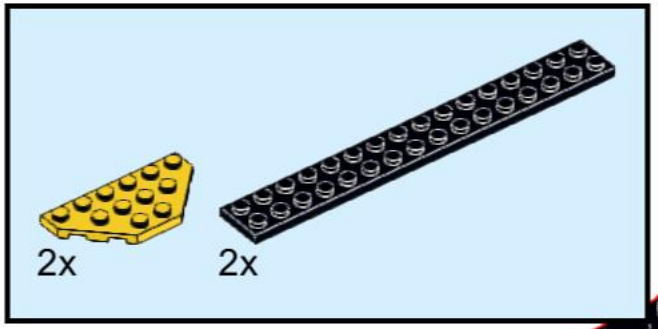


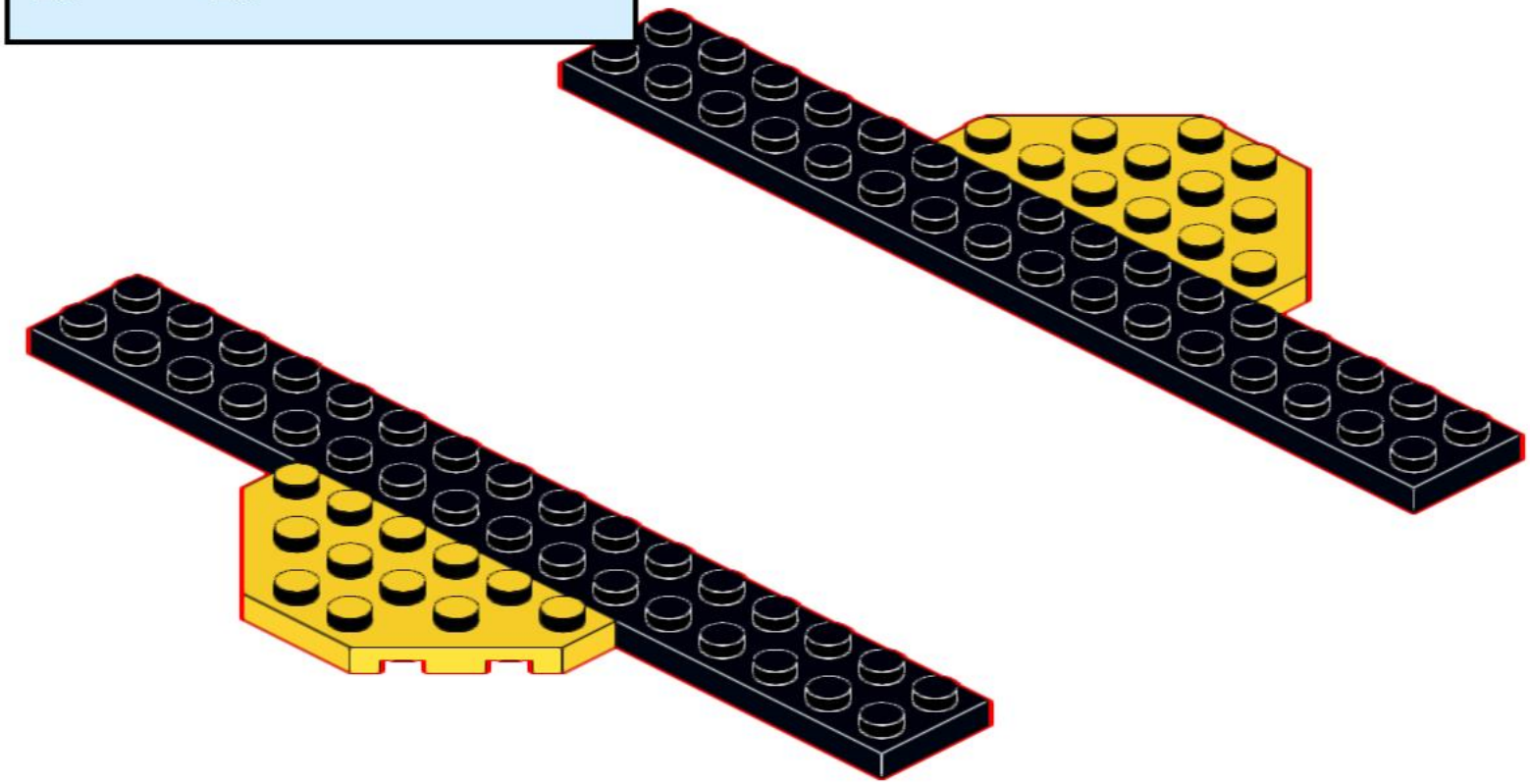

# 24




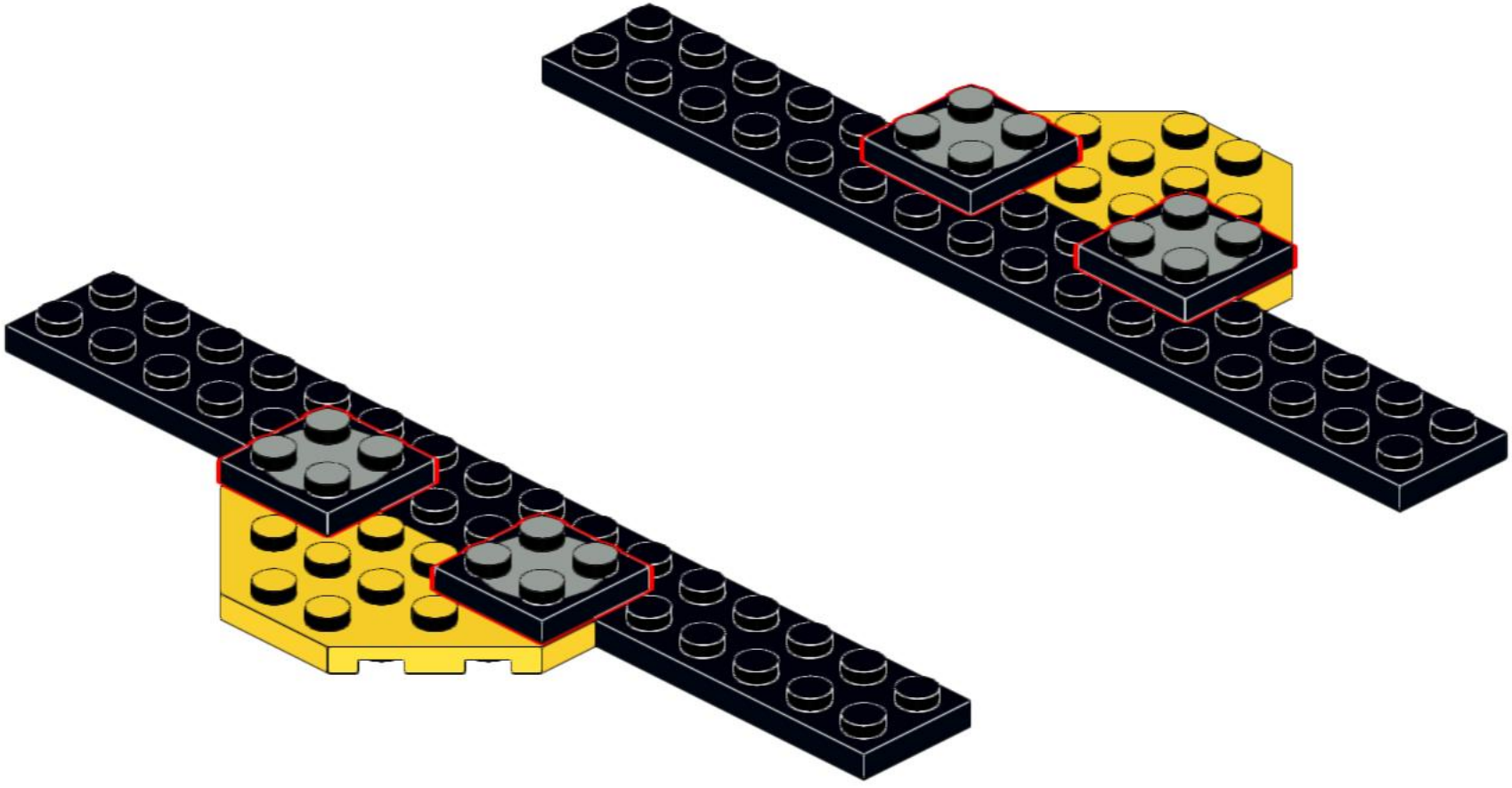

# 25

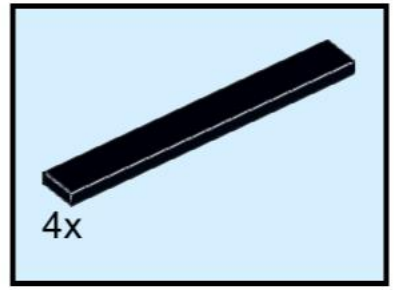


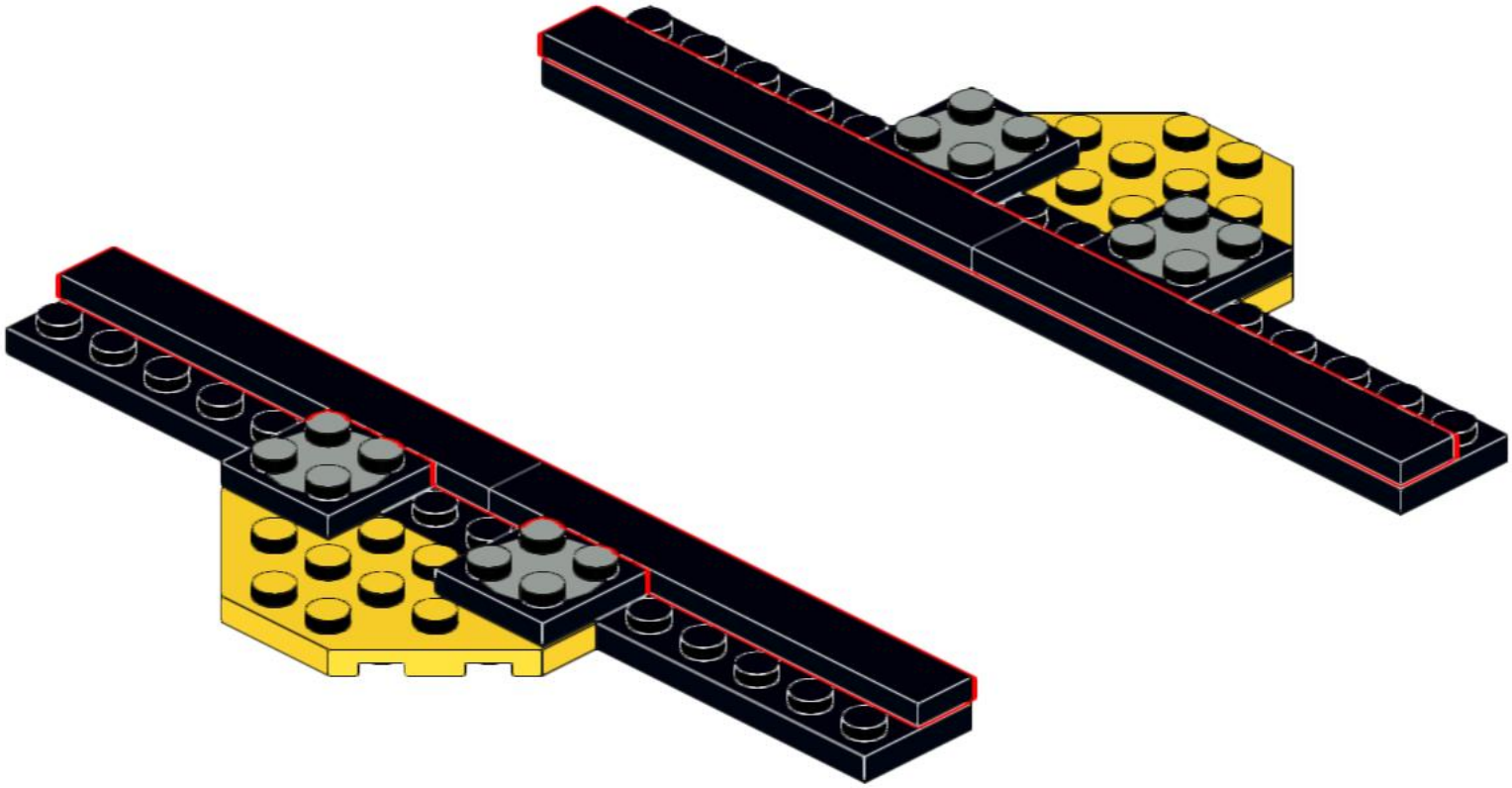

# 26

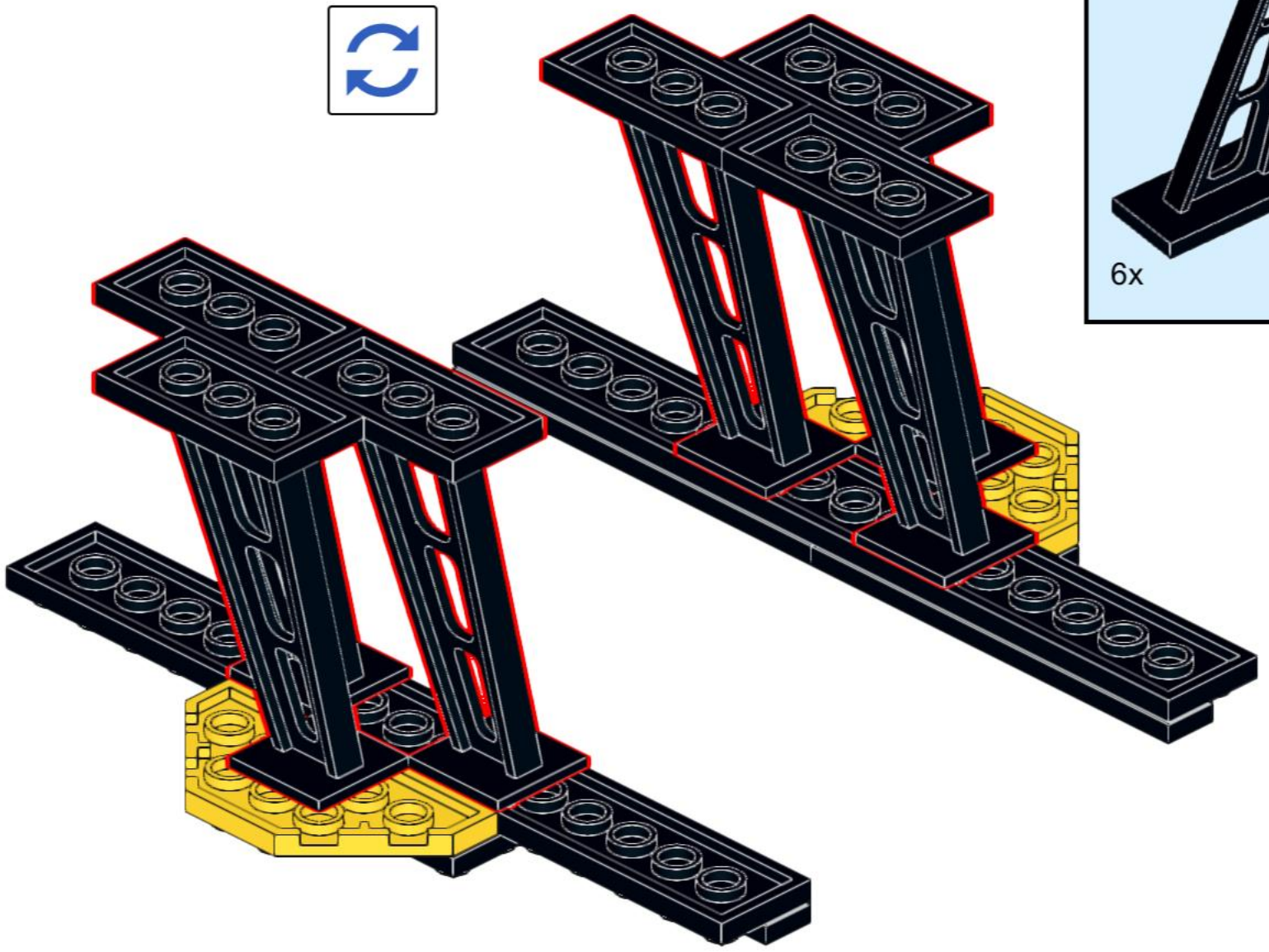

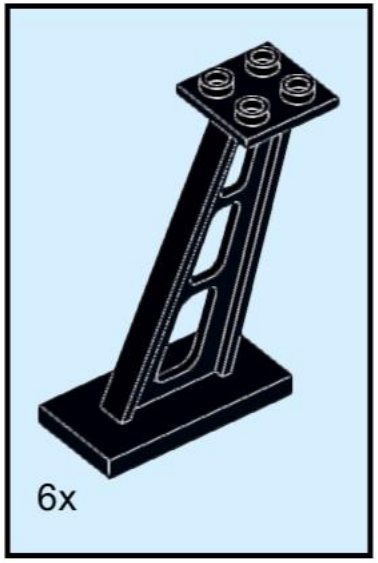

# 27

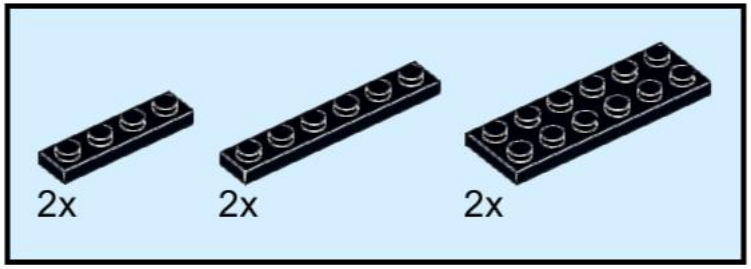


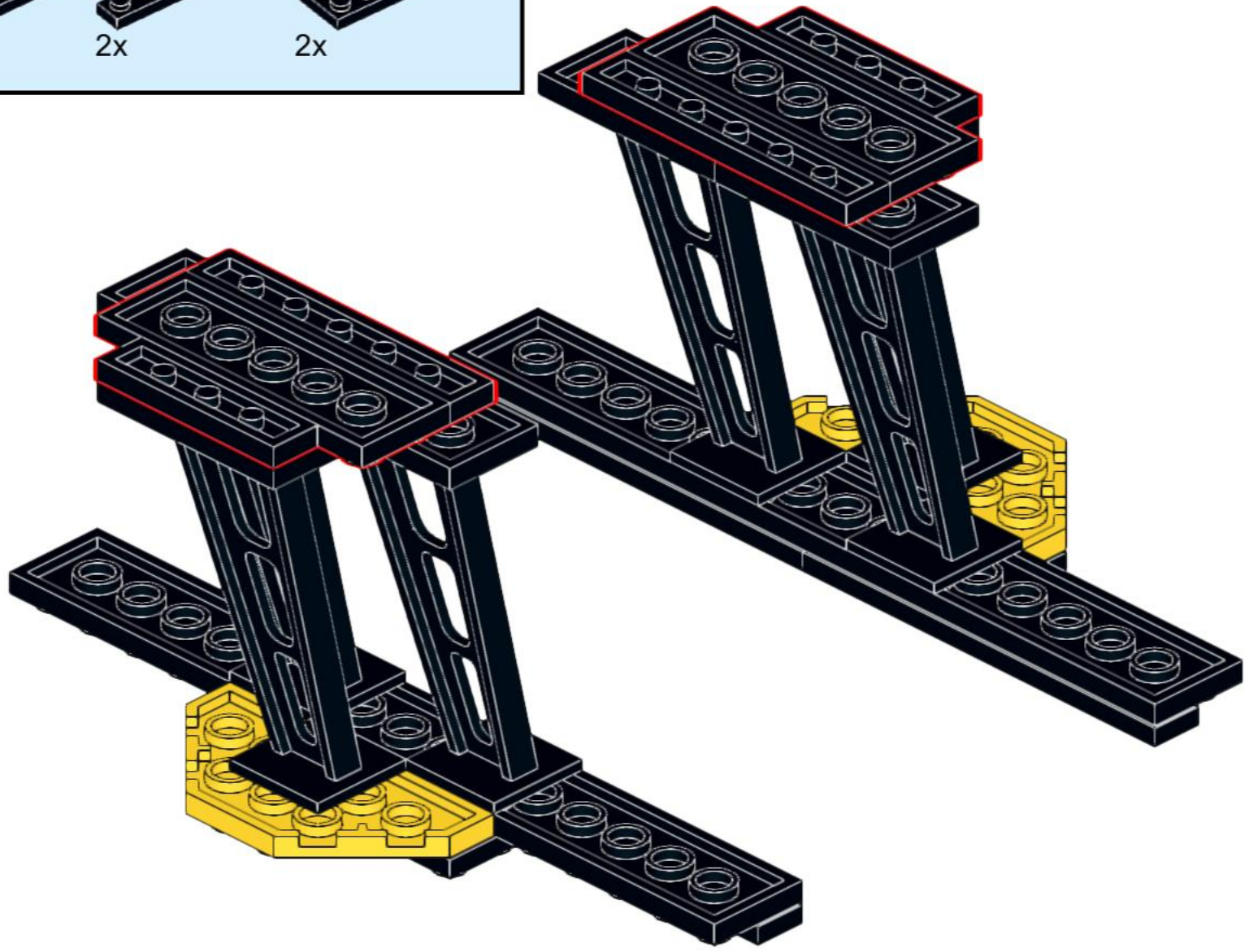

# 28



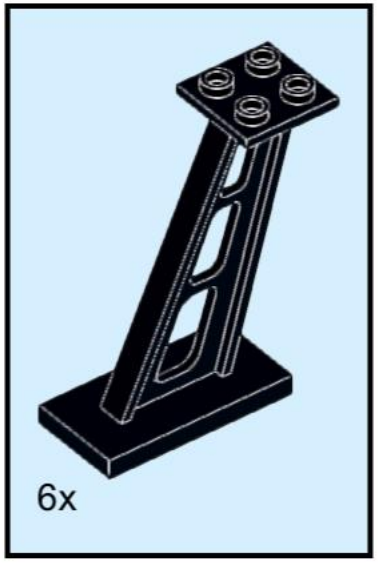

# 29

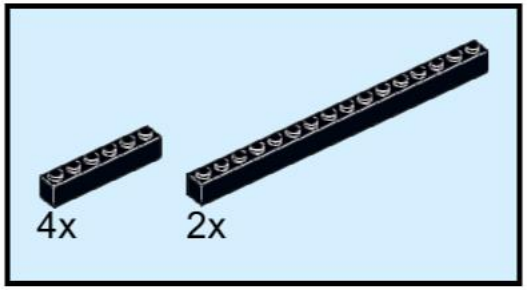

# 30

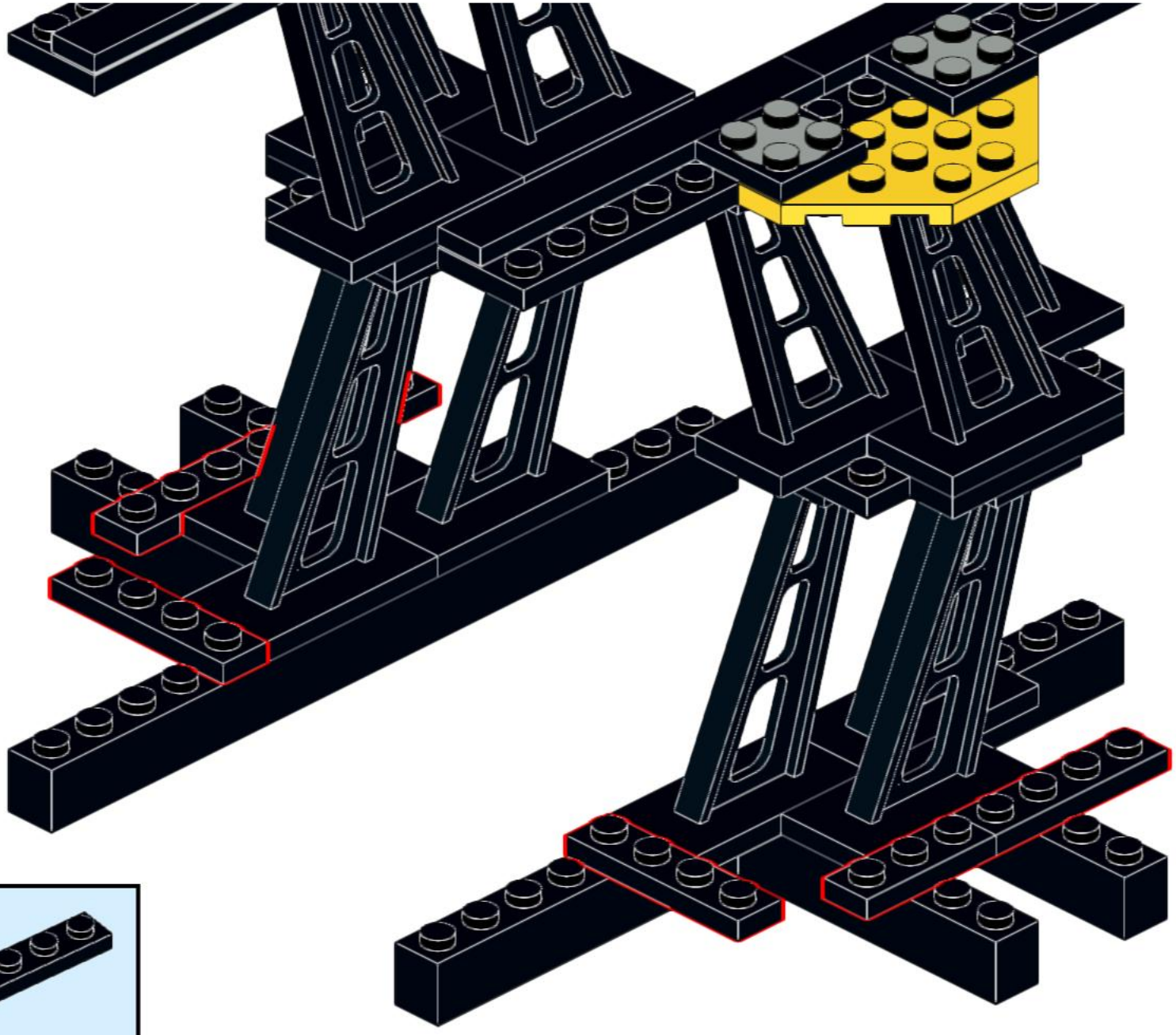



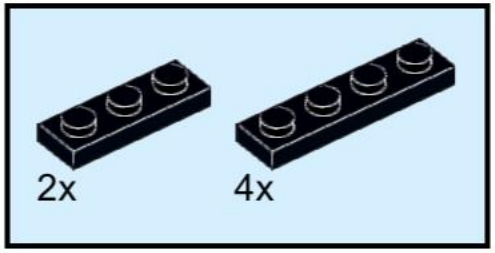

# 31

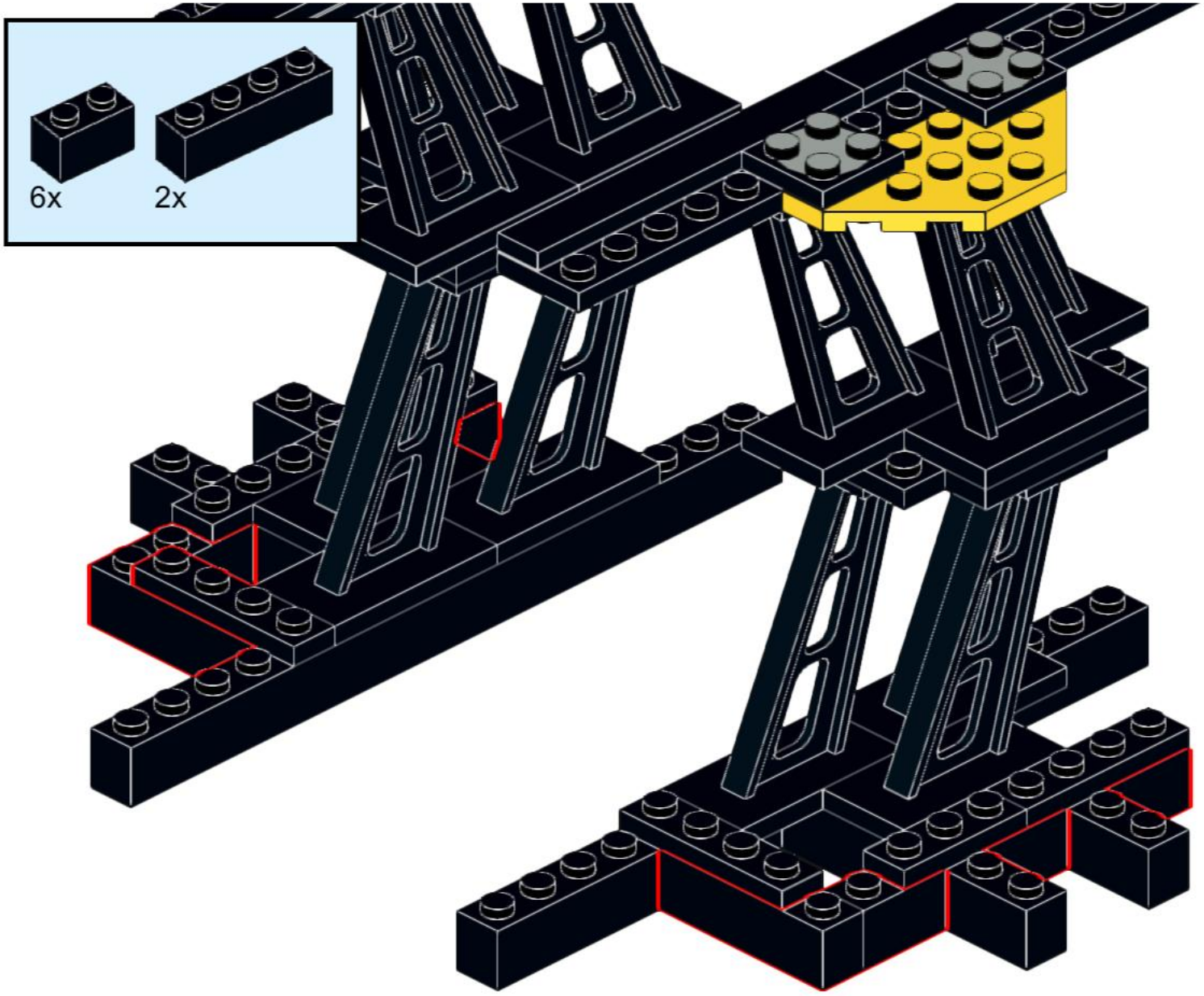

# 32

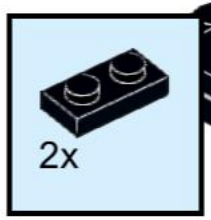


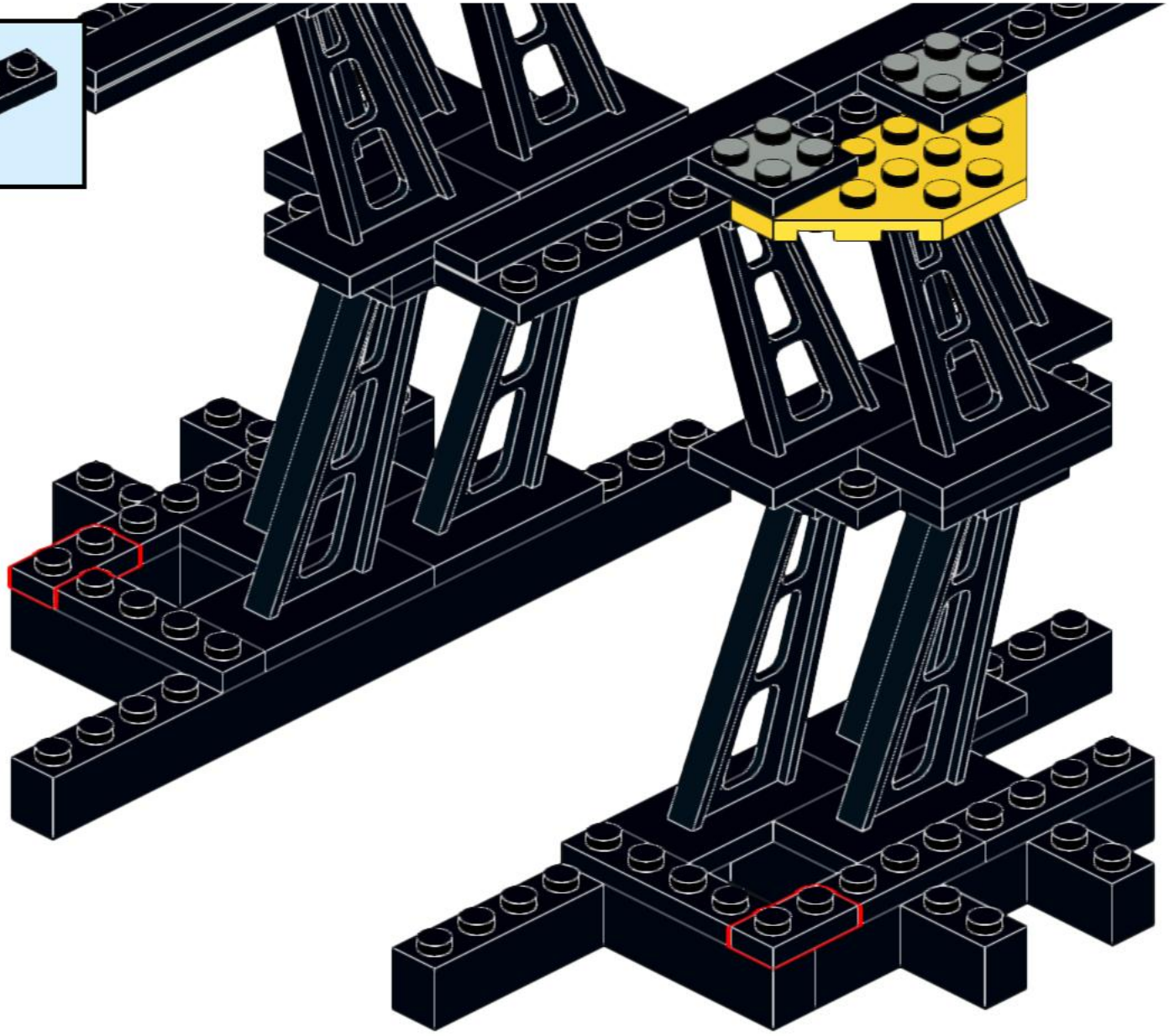

# 33

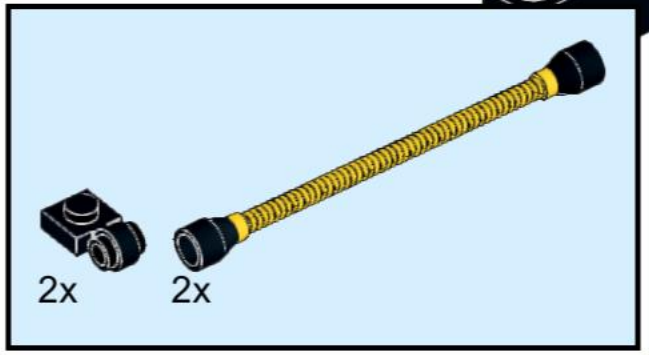

# 34

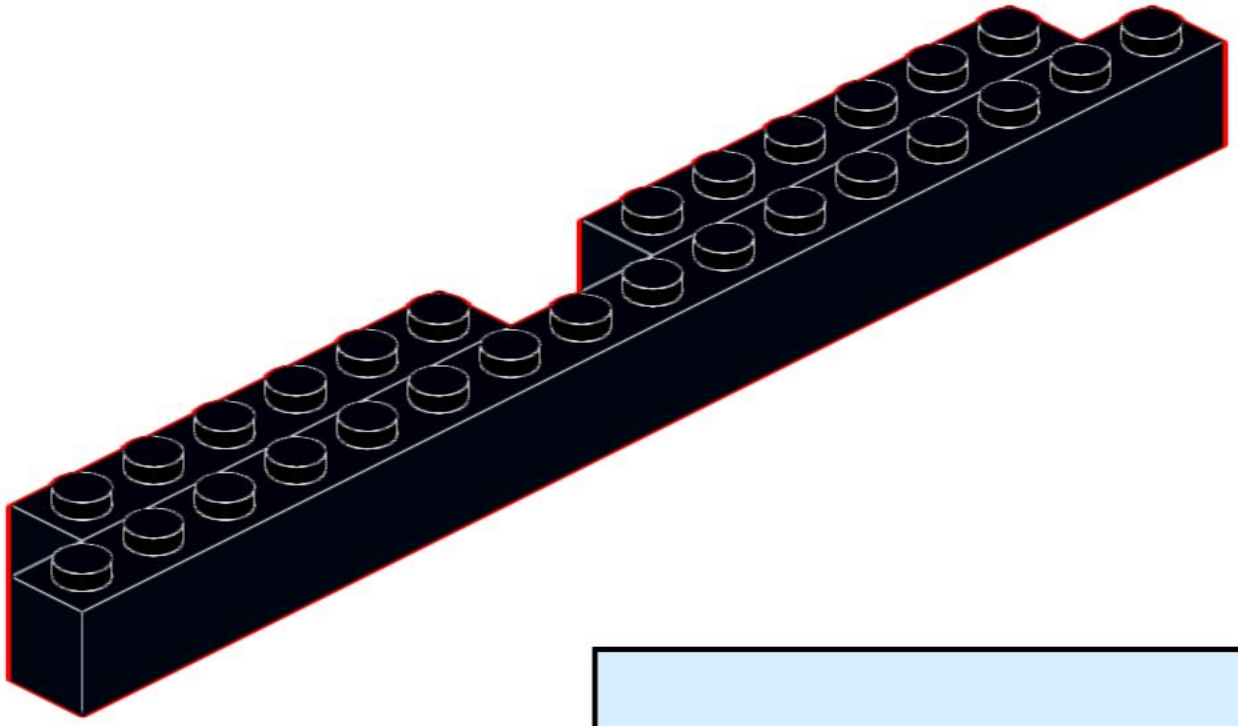

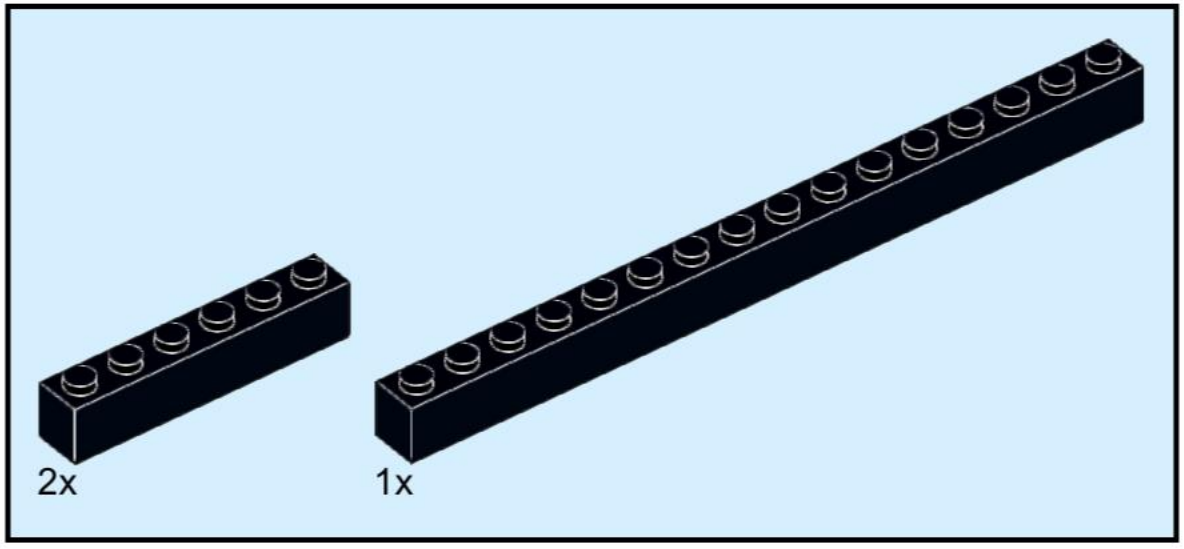

# 35

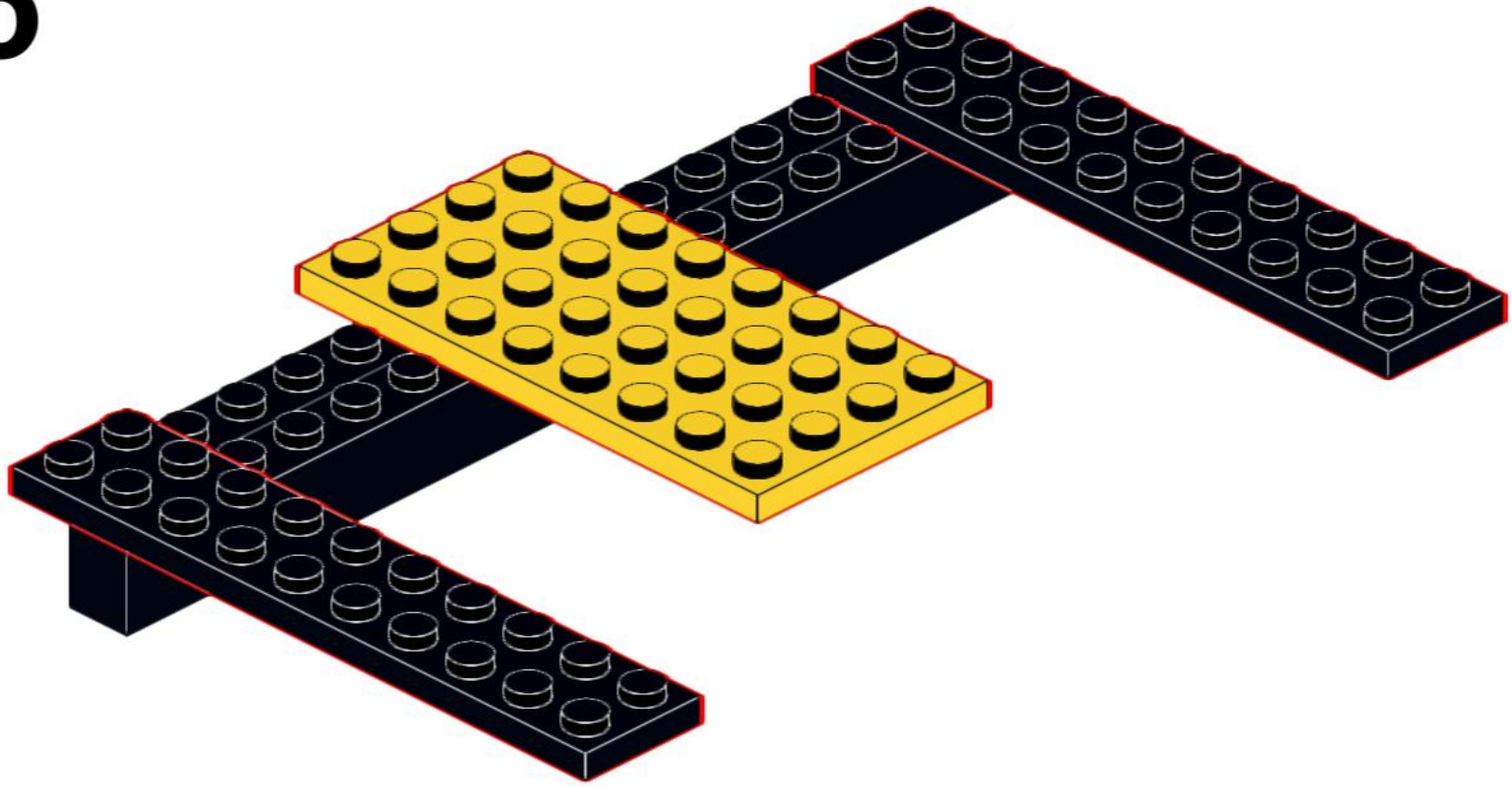

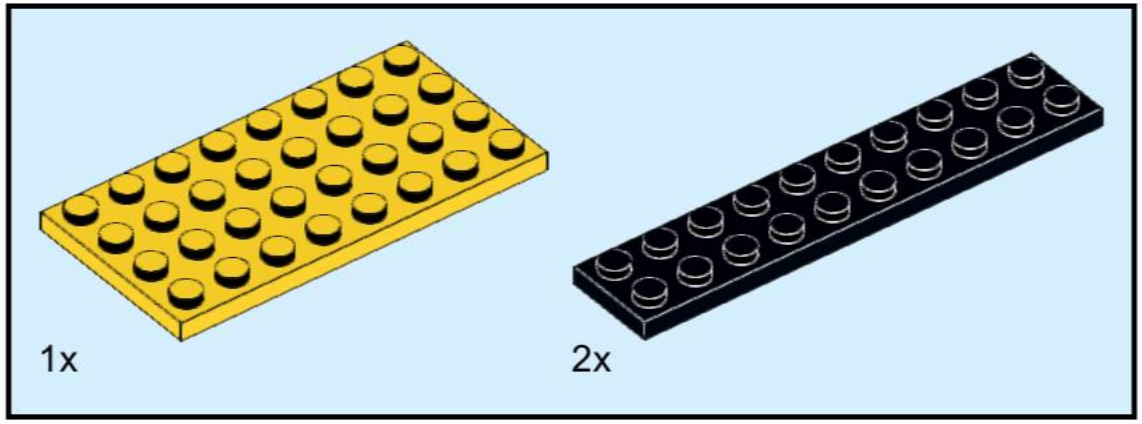

# 36

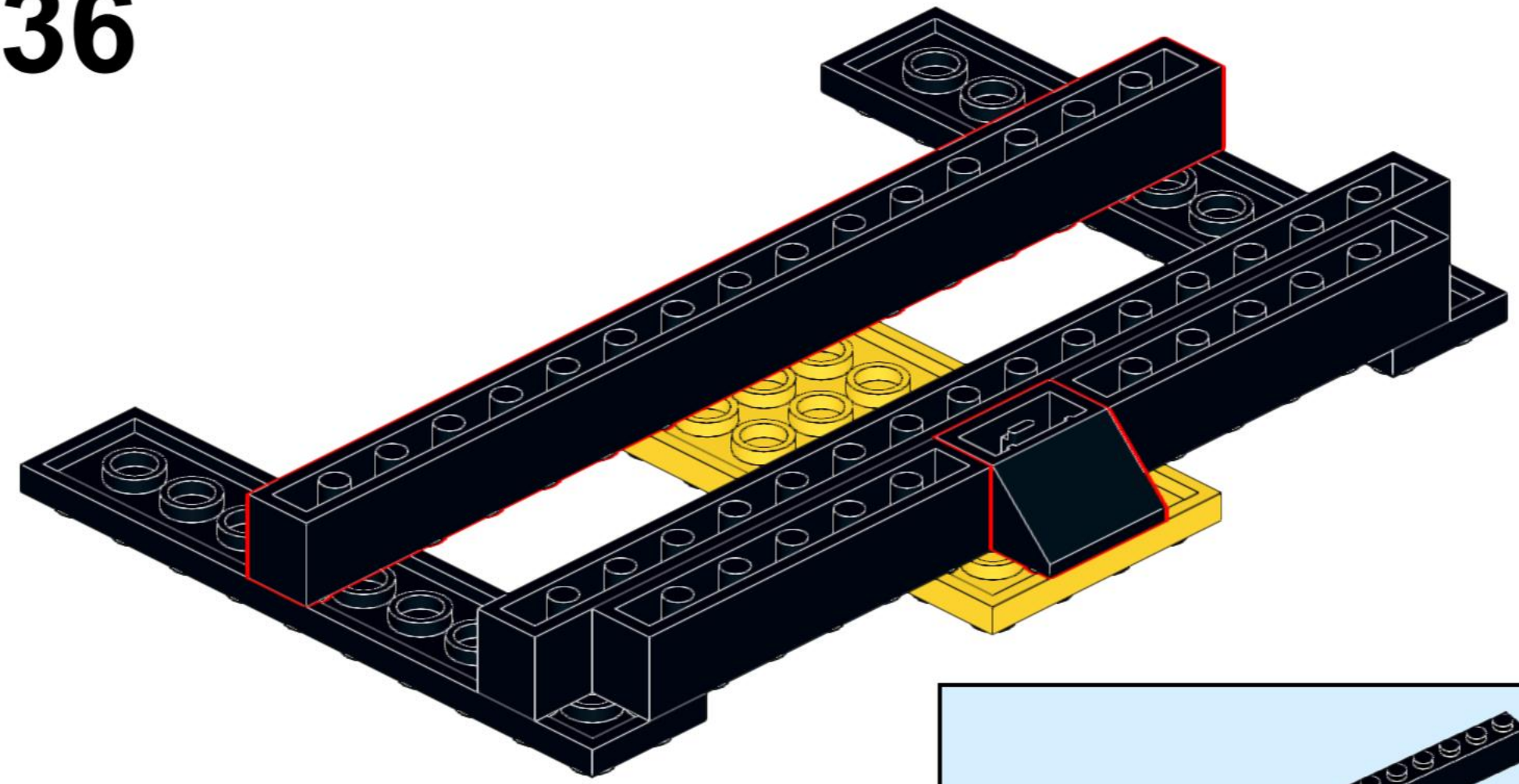

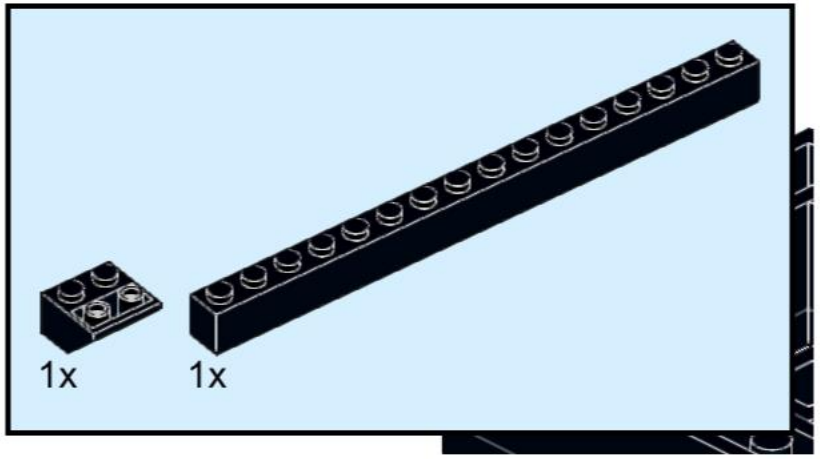

# 37

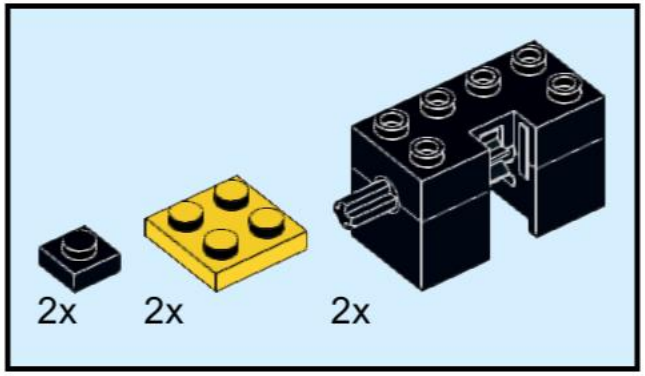


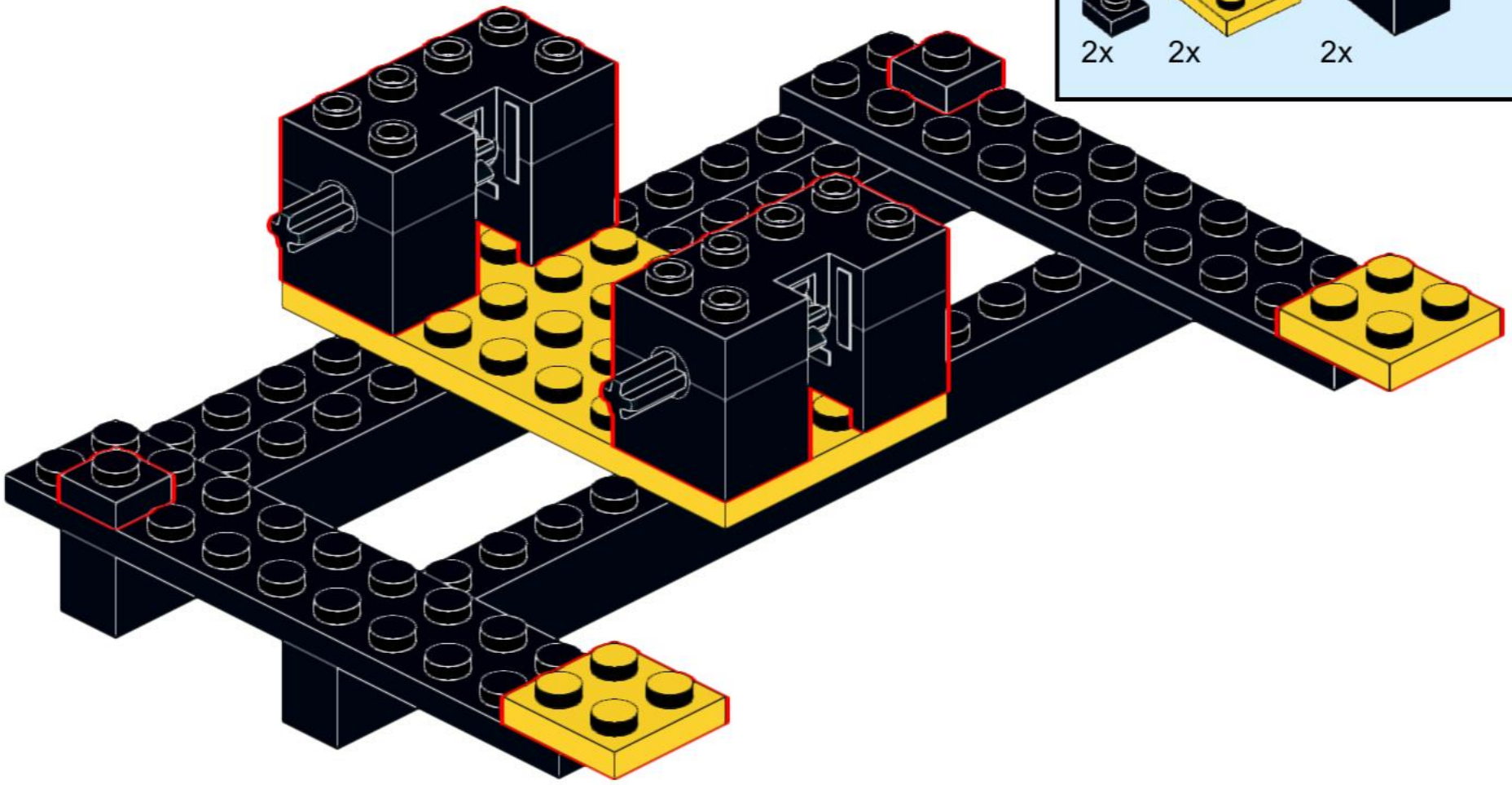

# 38

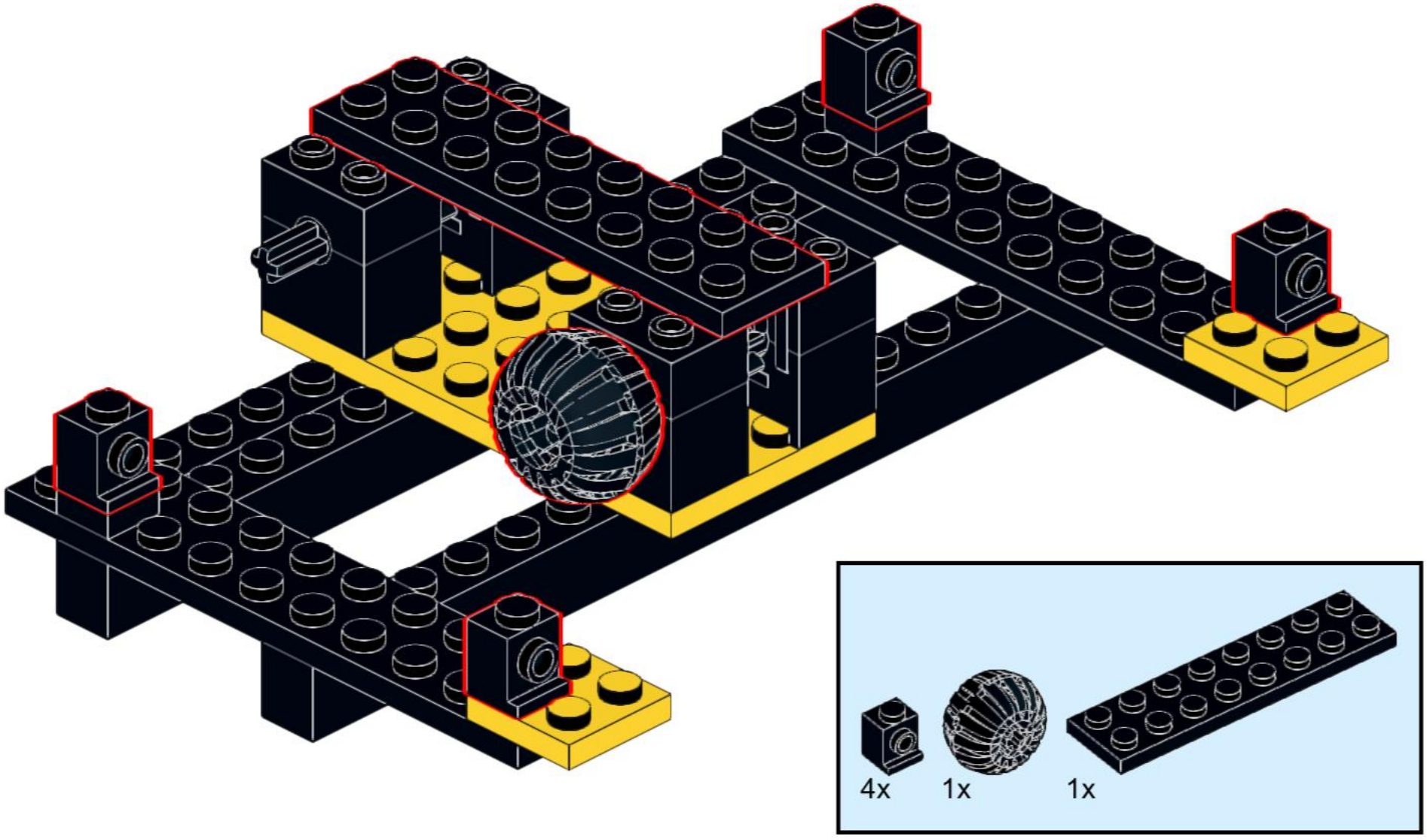

# 39

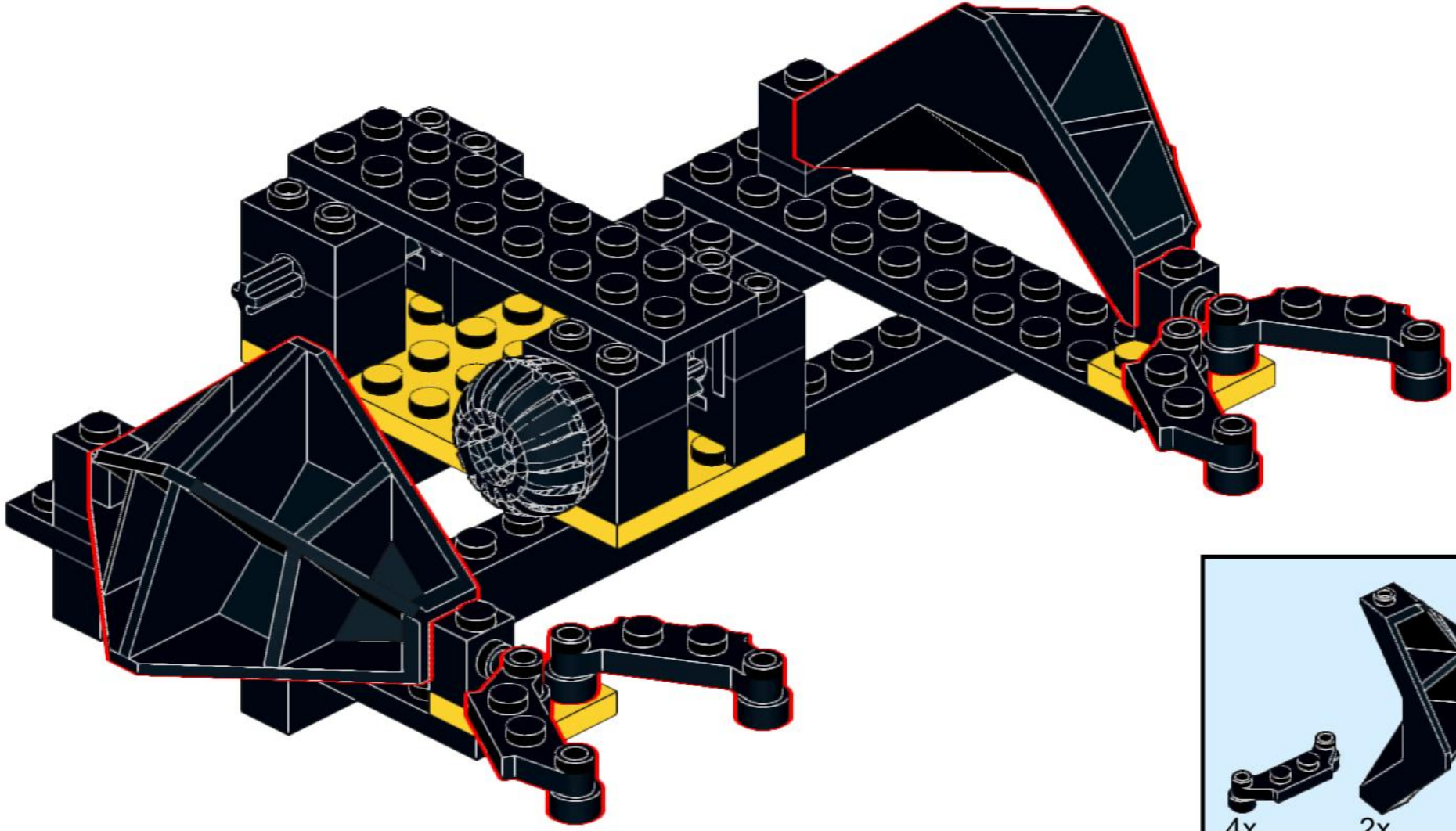

# 40

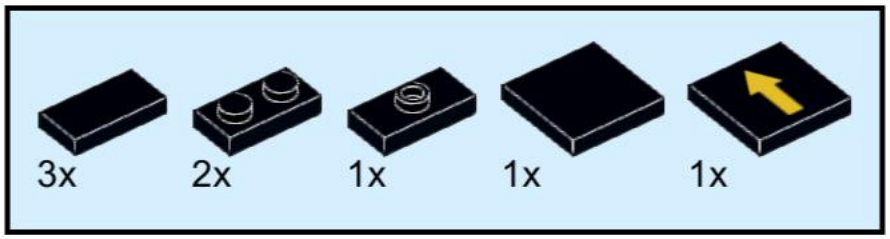


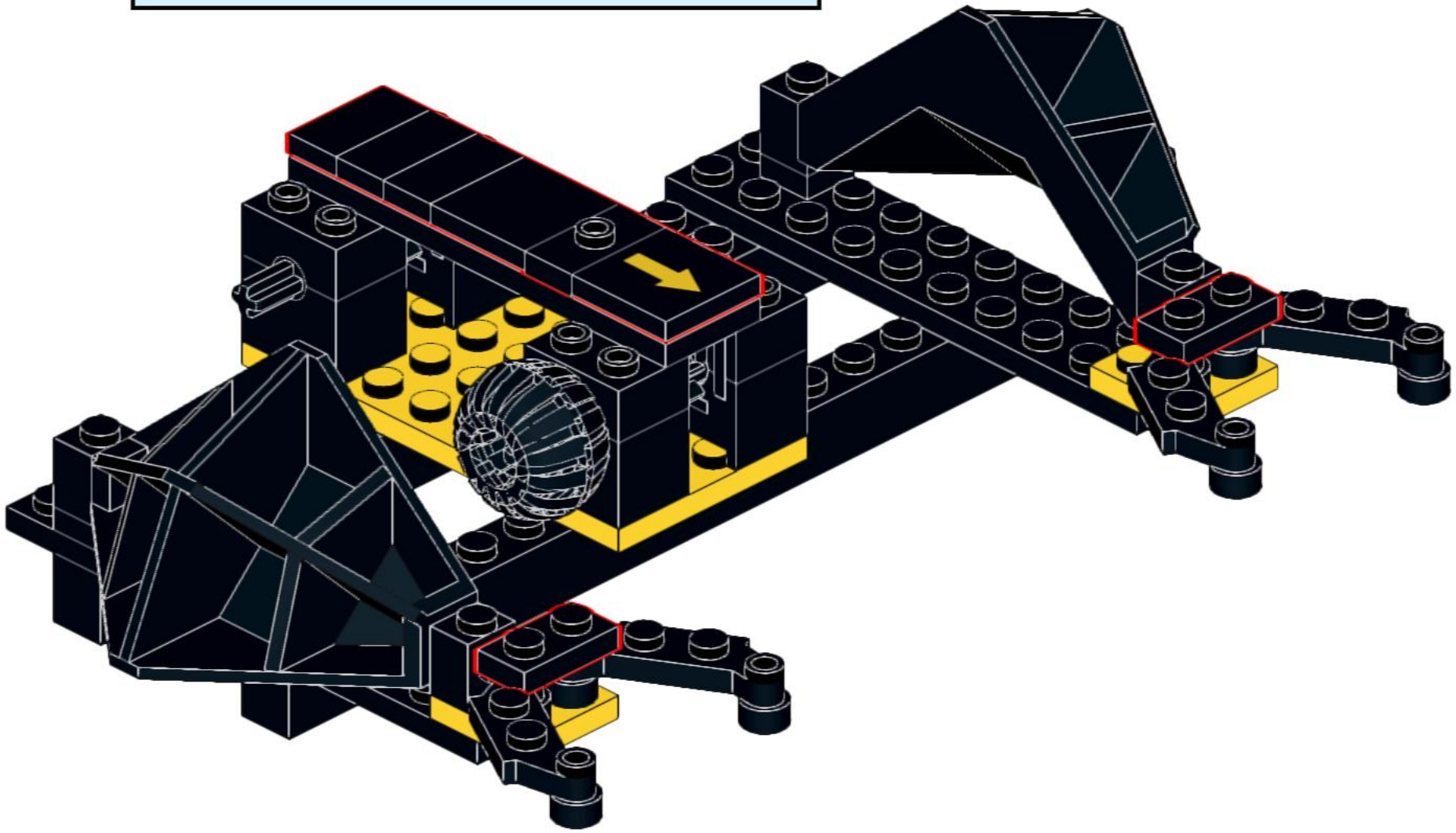

# 41

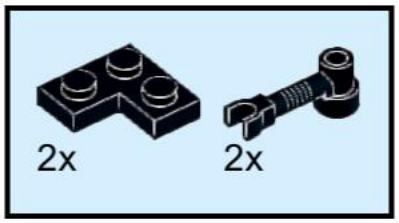


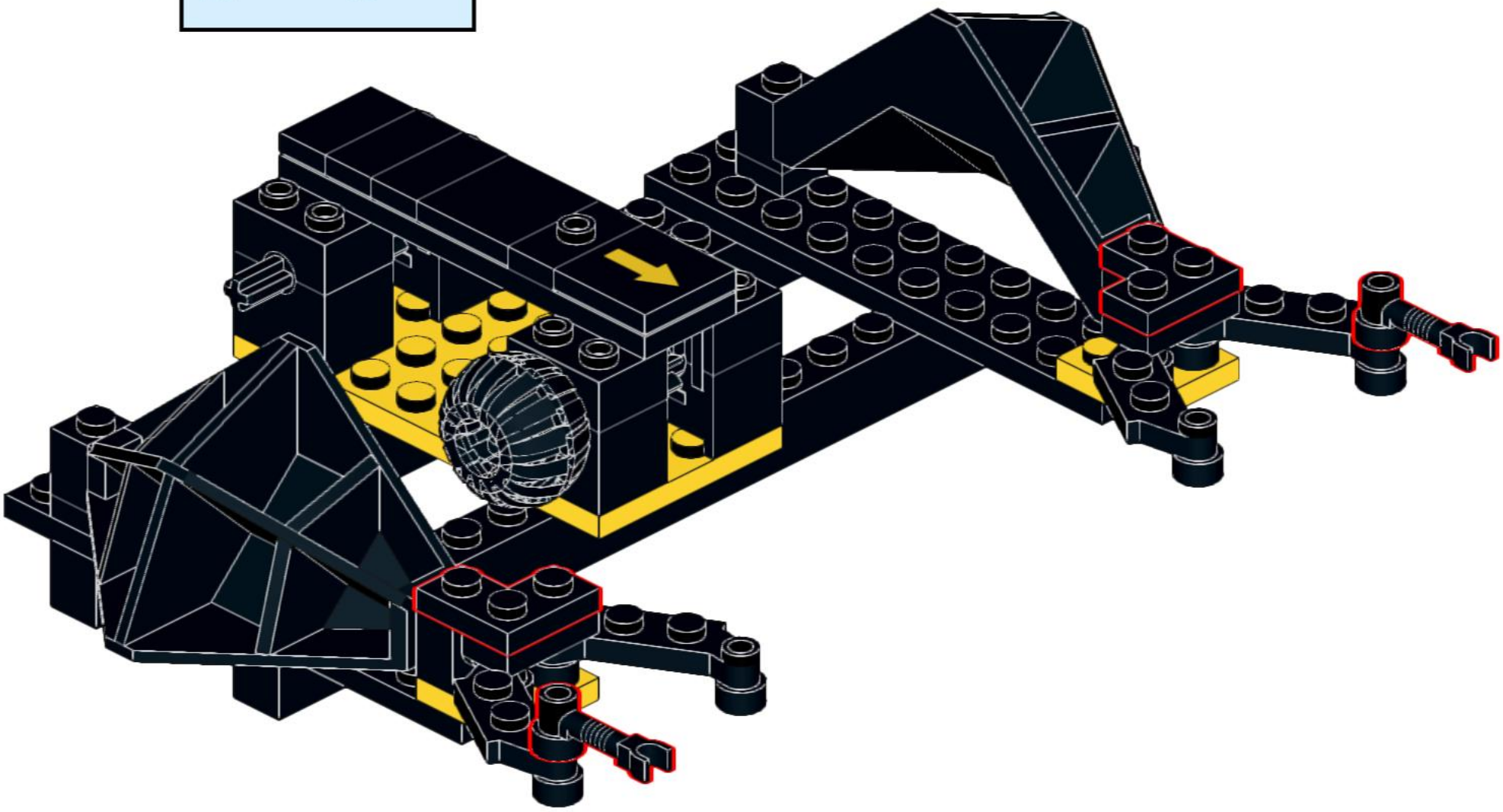

42



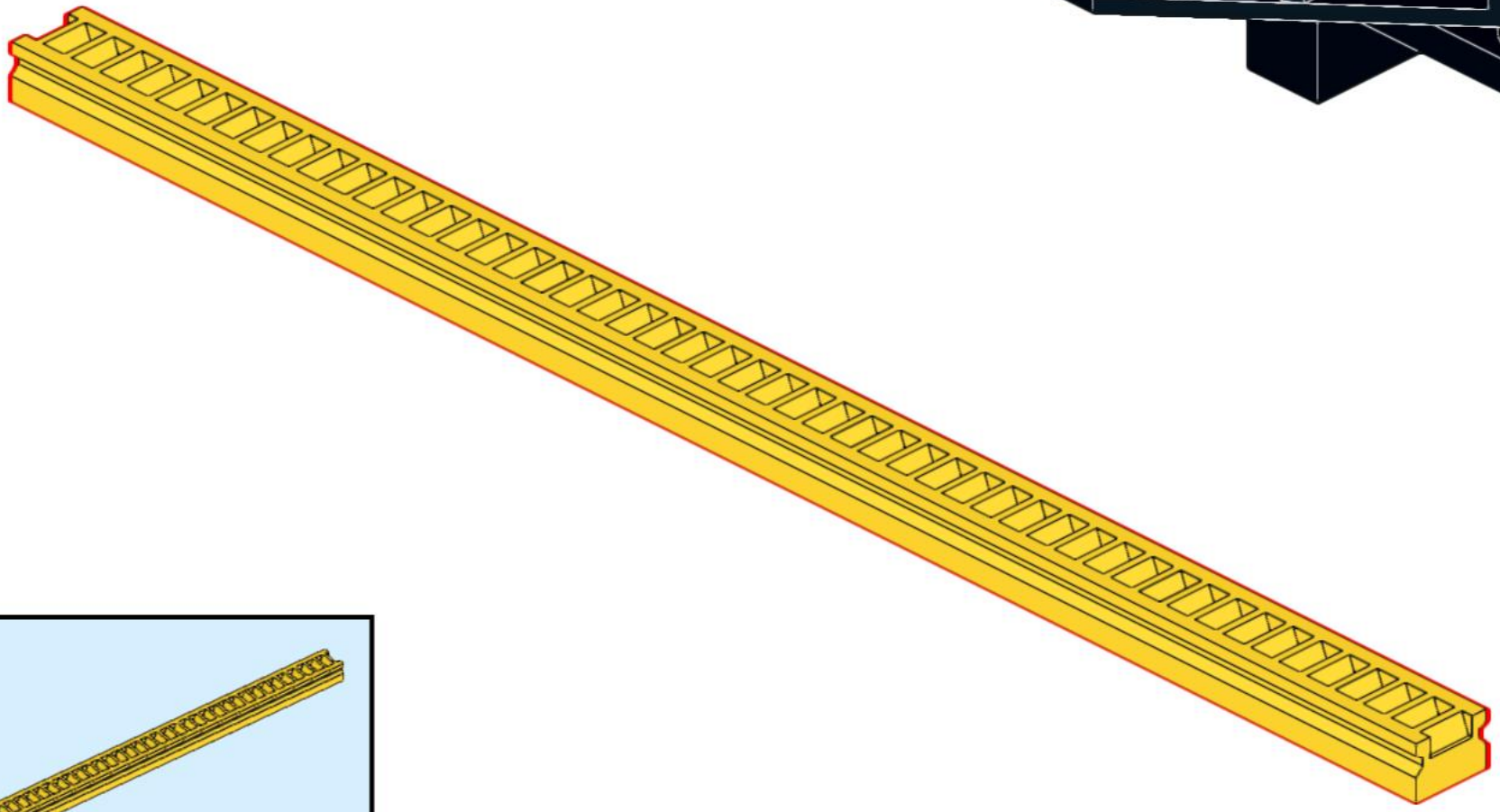

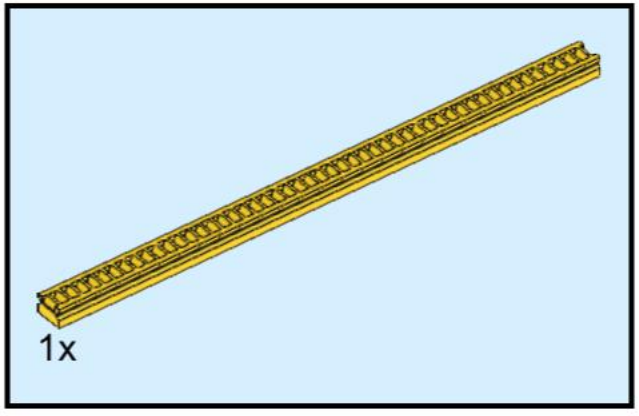



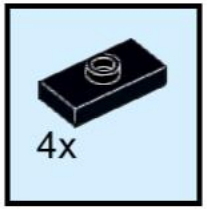
4x

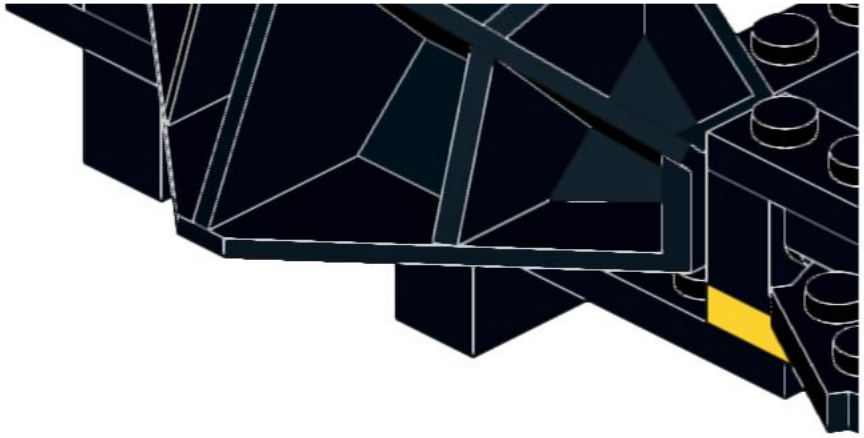

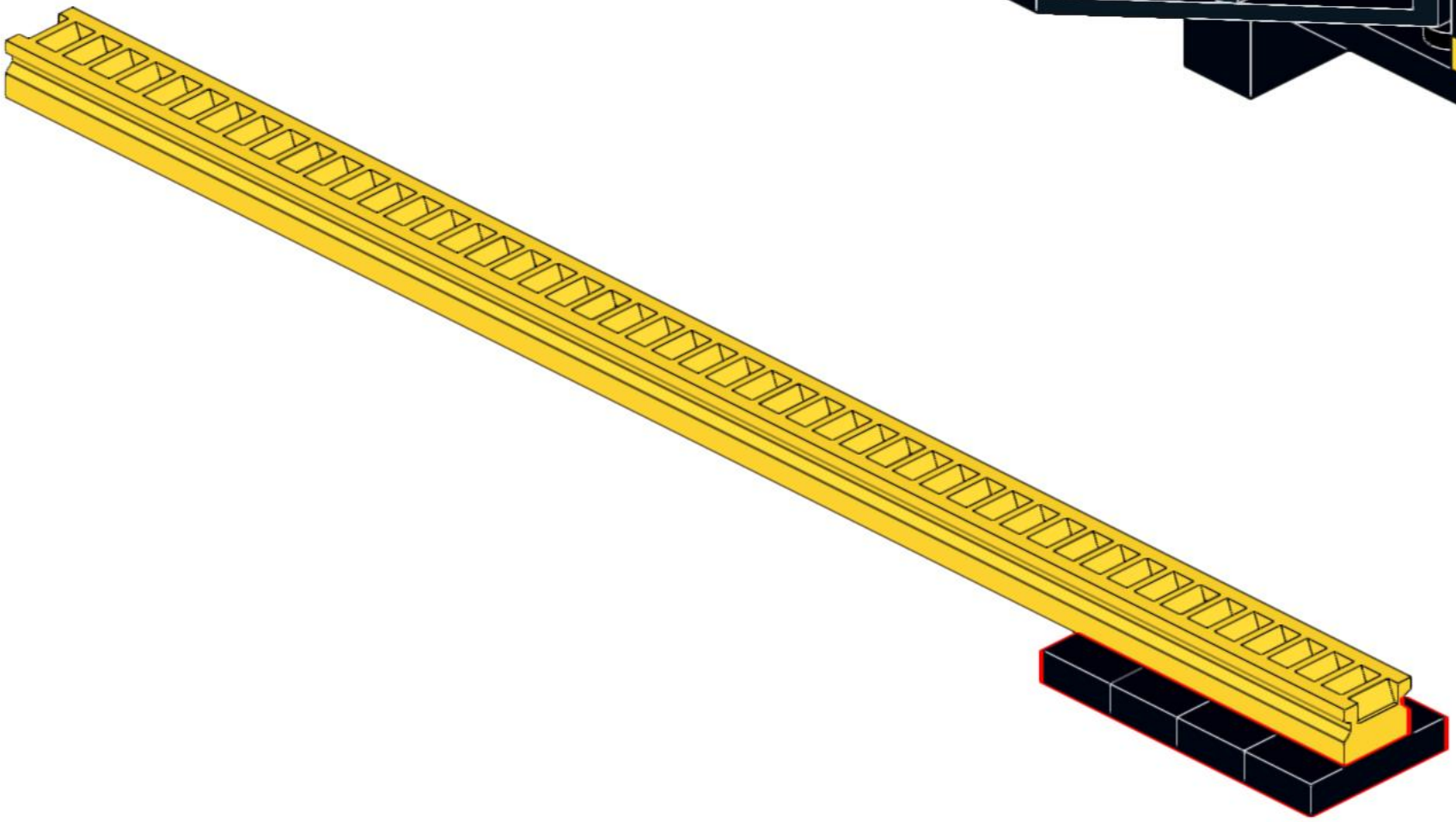

# 44

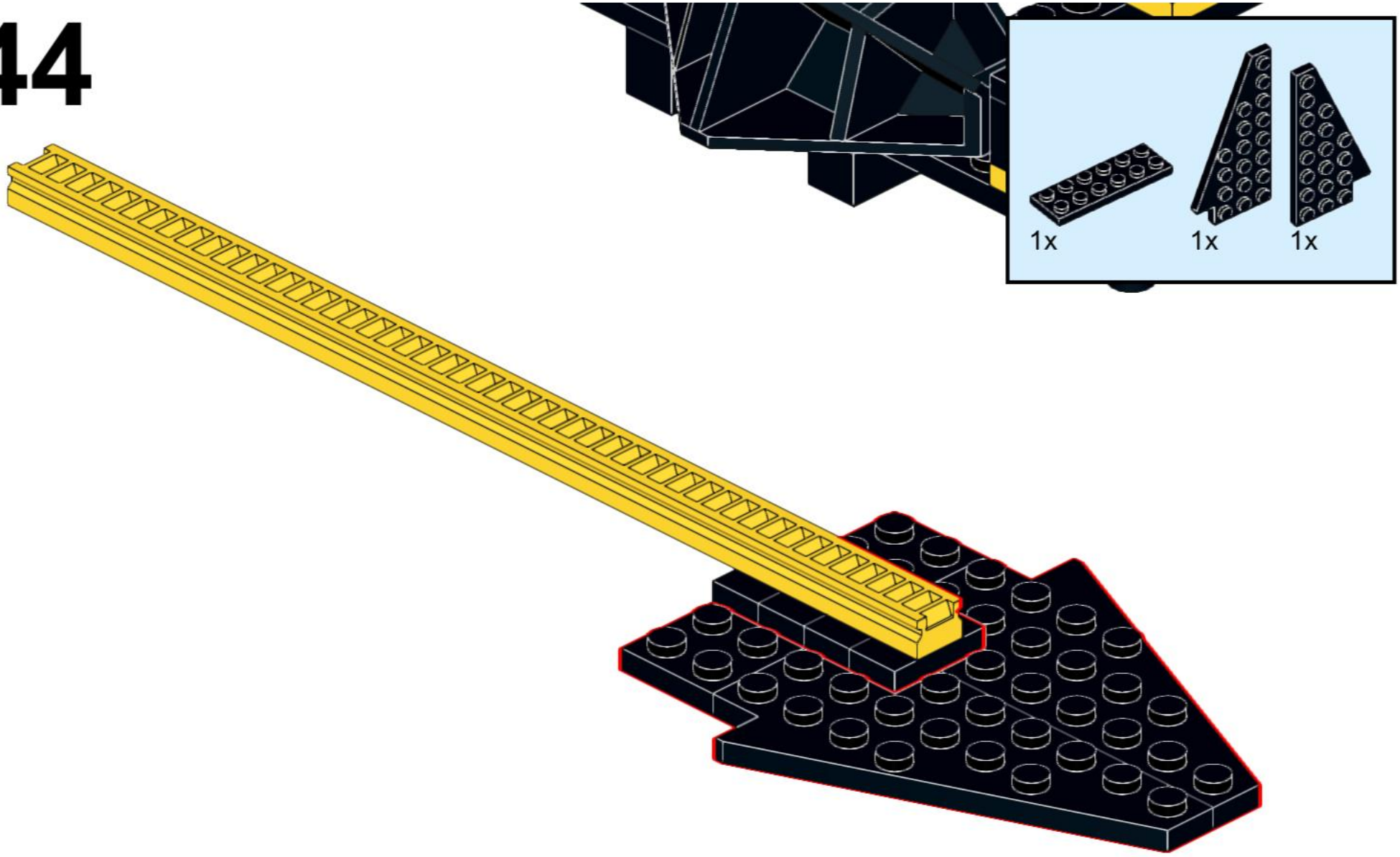

# 45

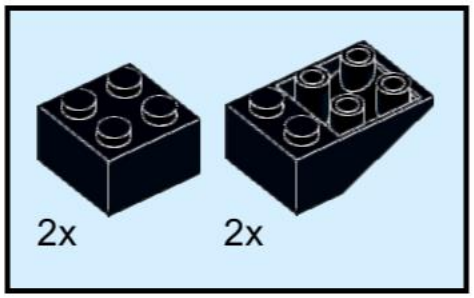


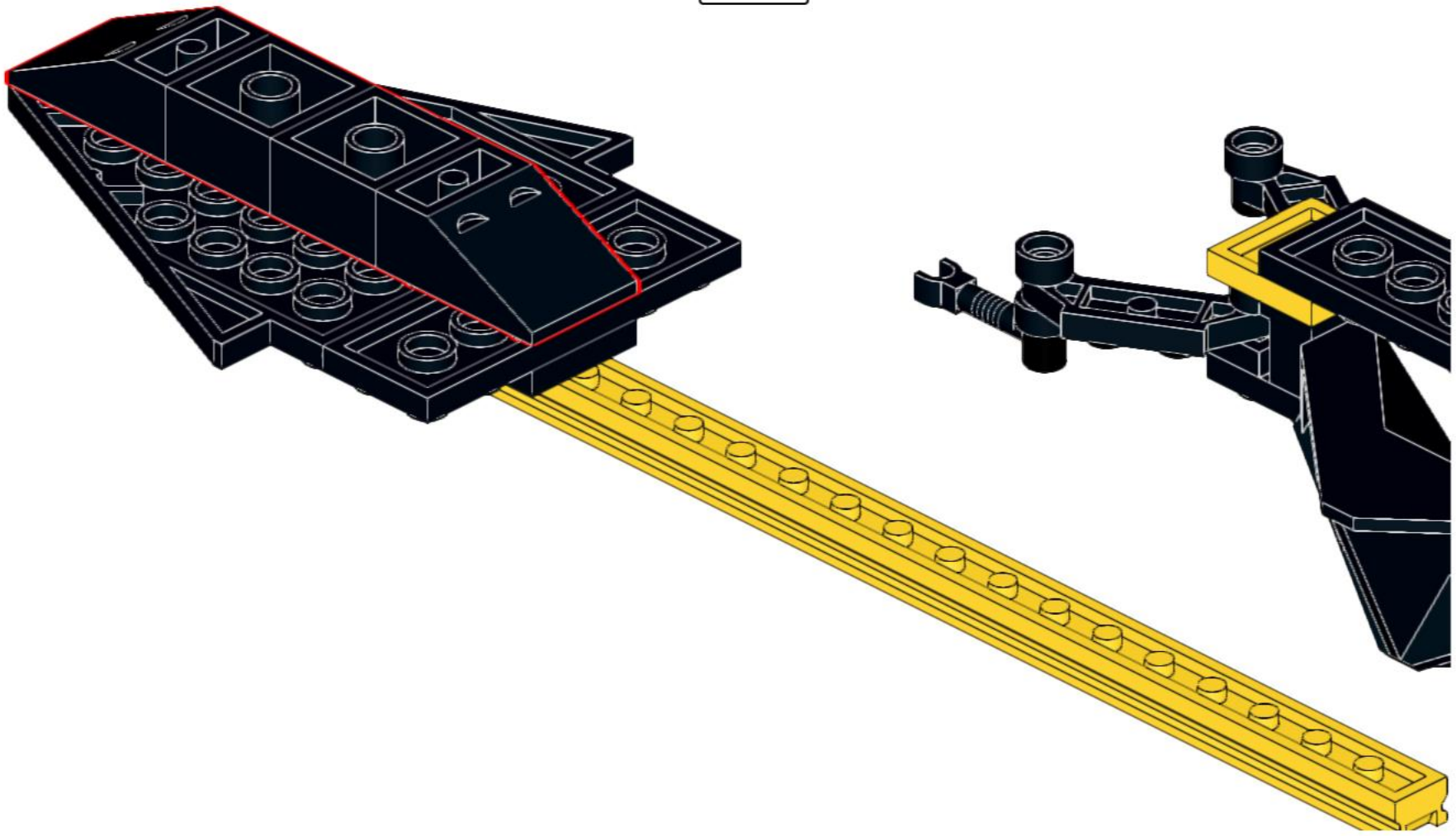

# 46

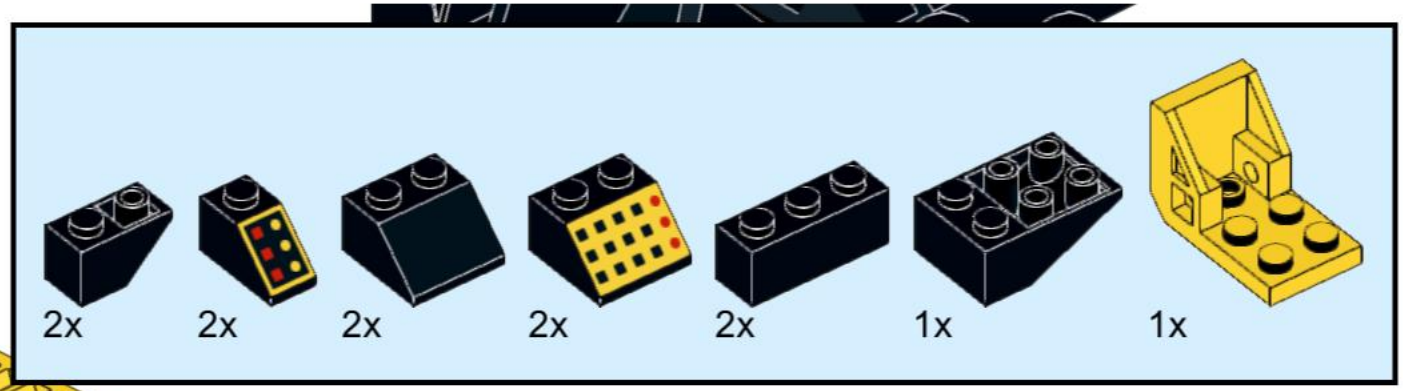


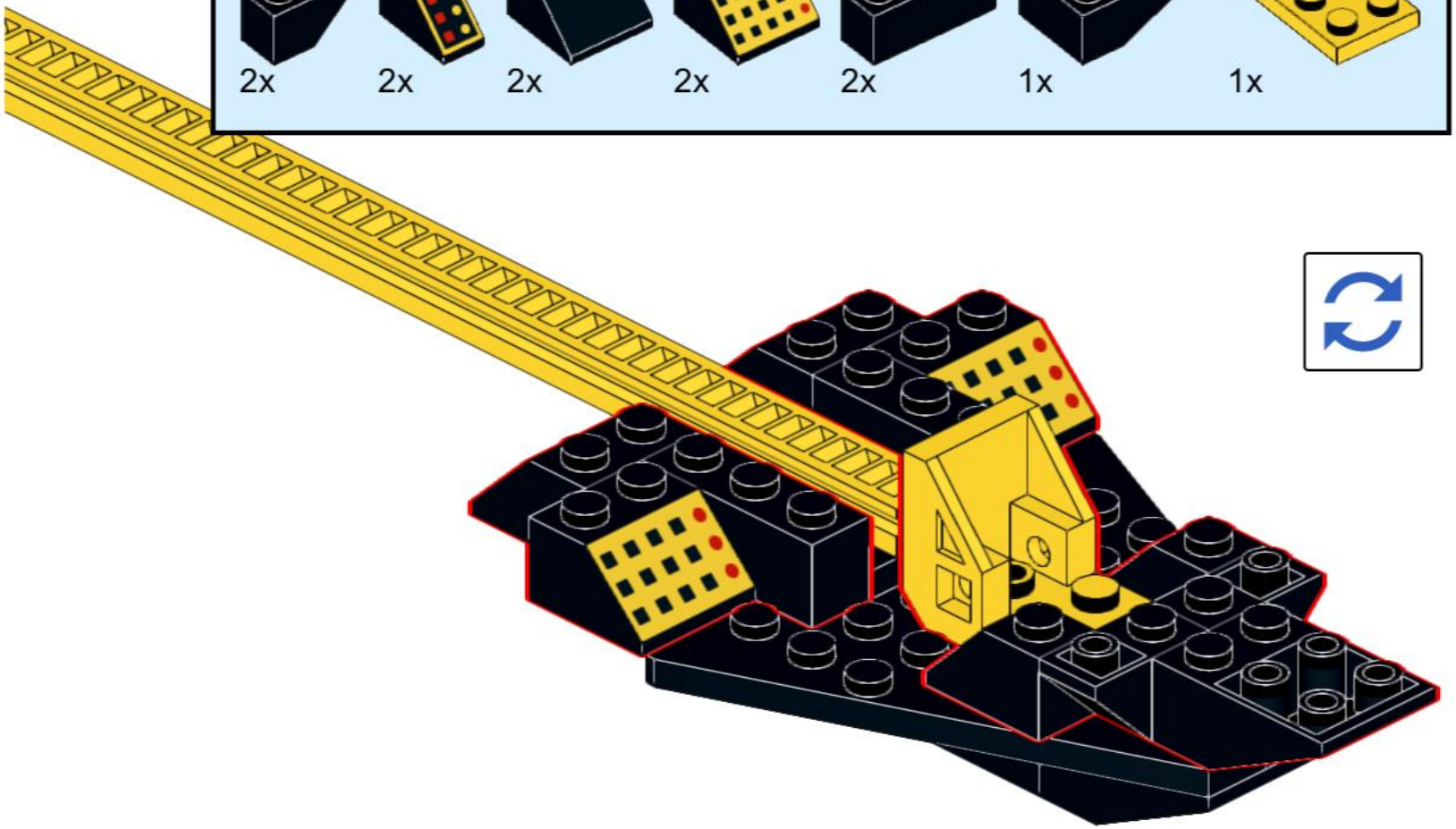

# 47

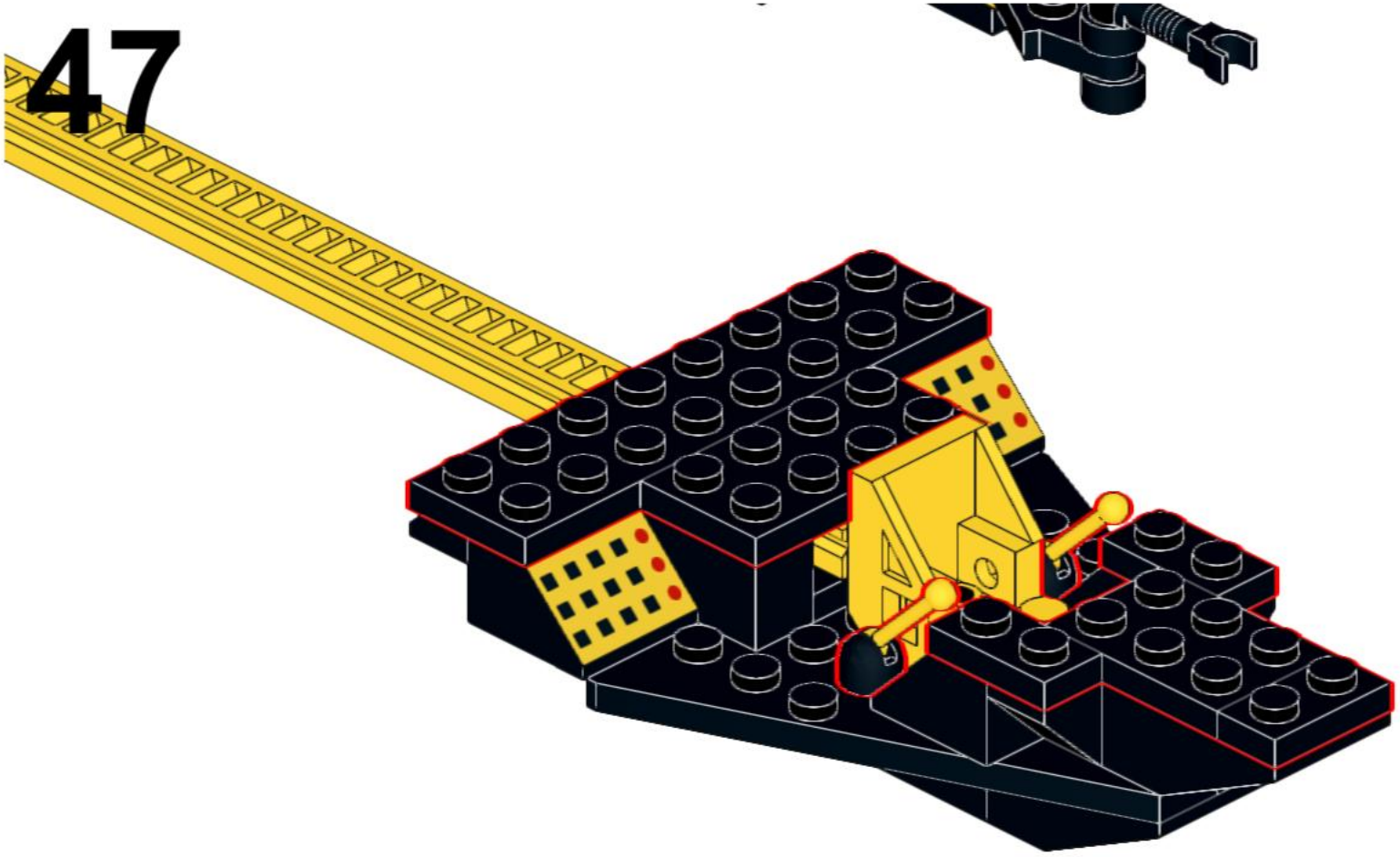

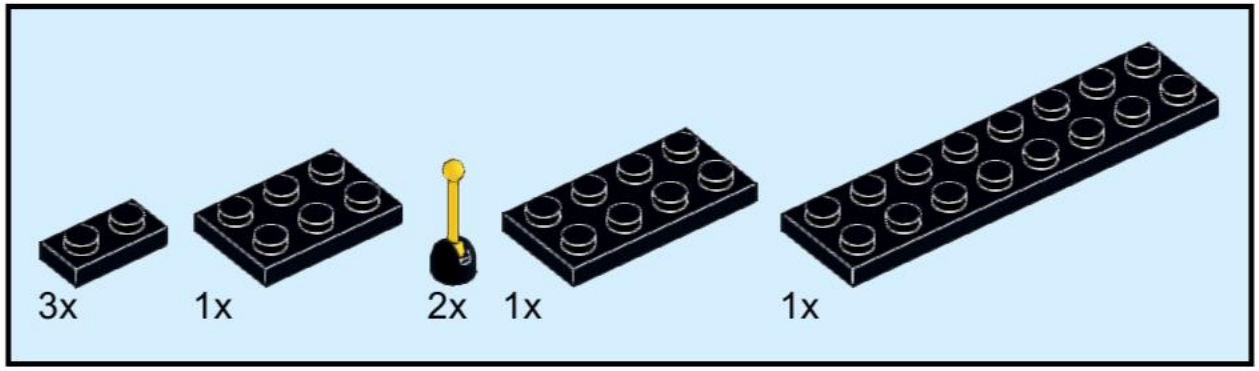

# 48

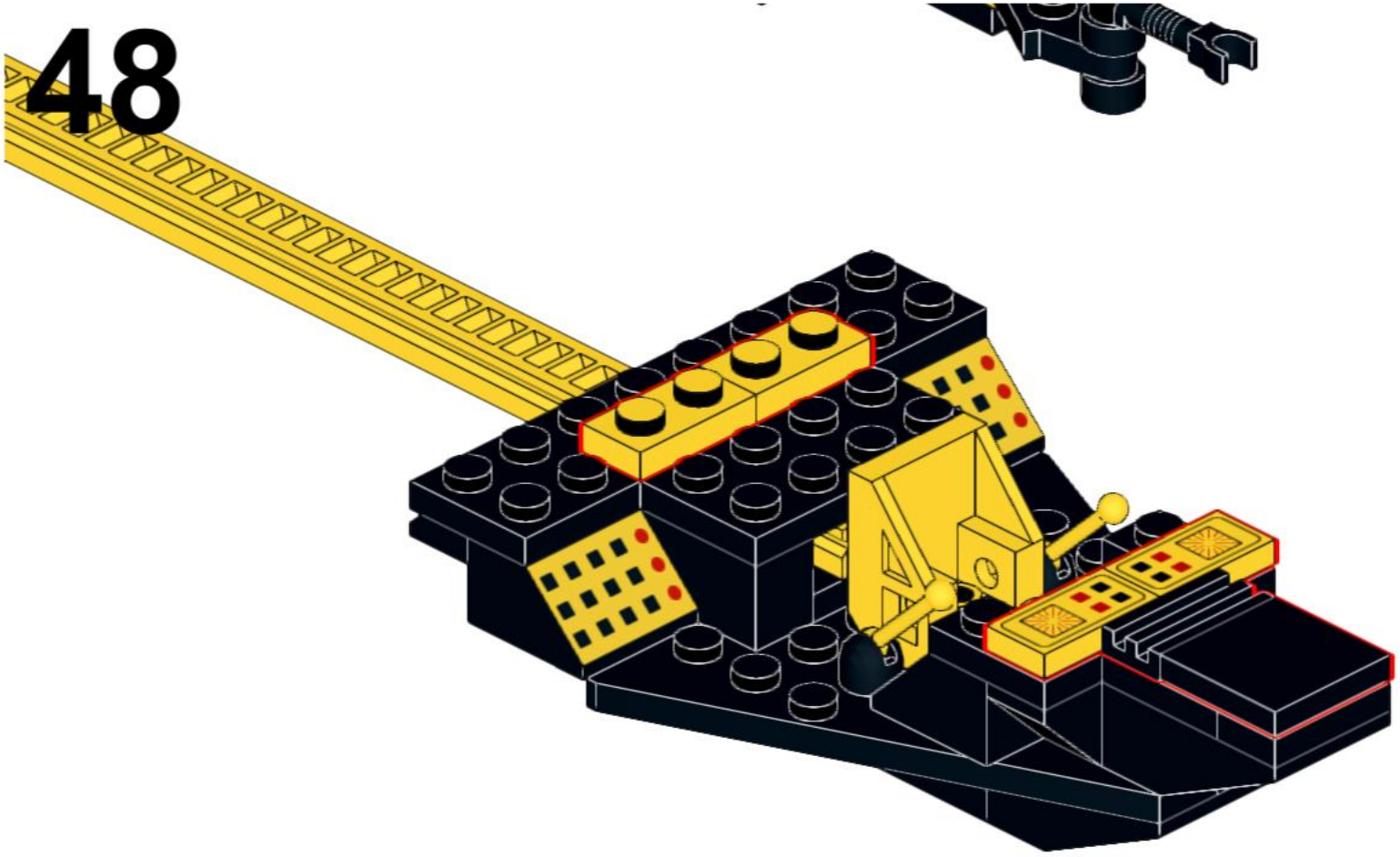

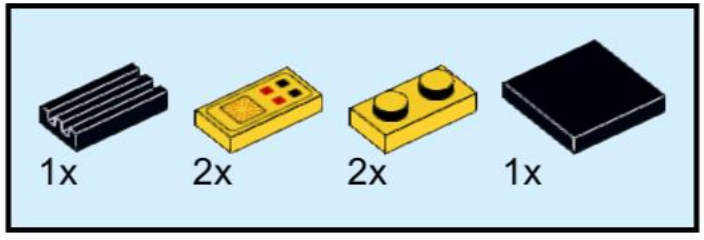

# 49

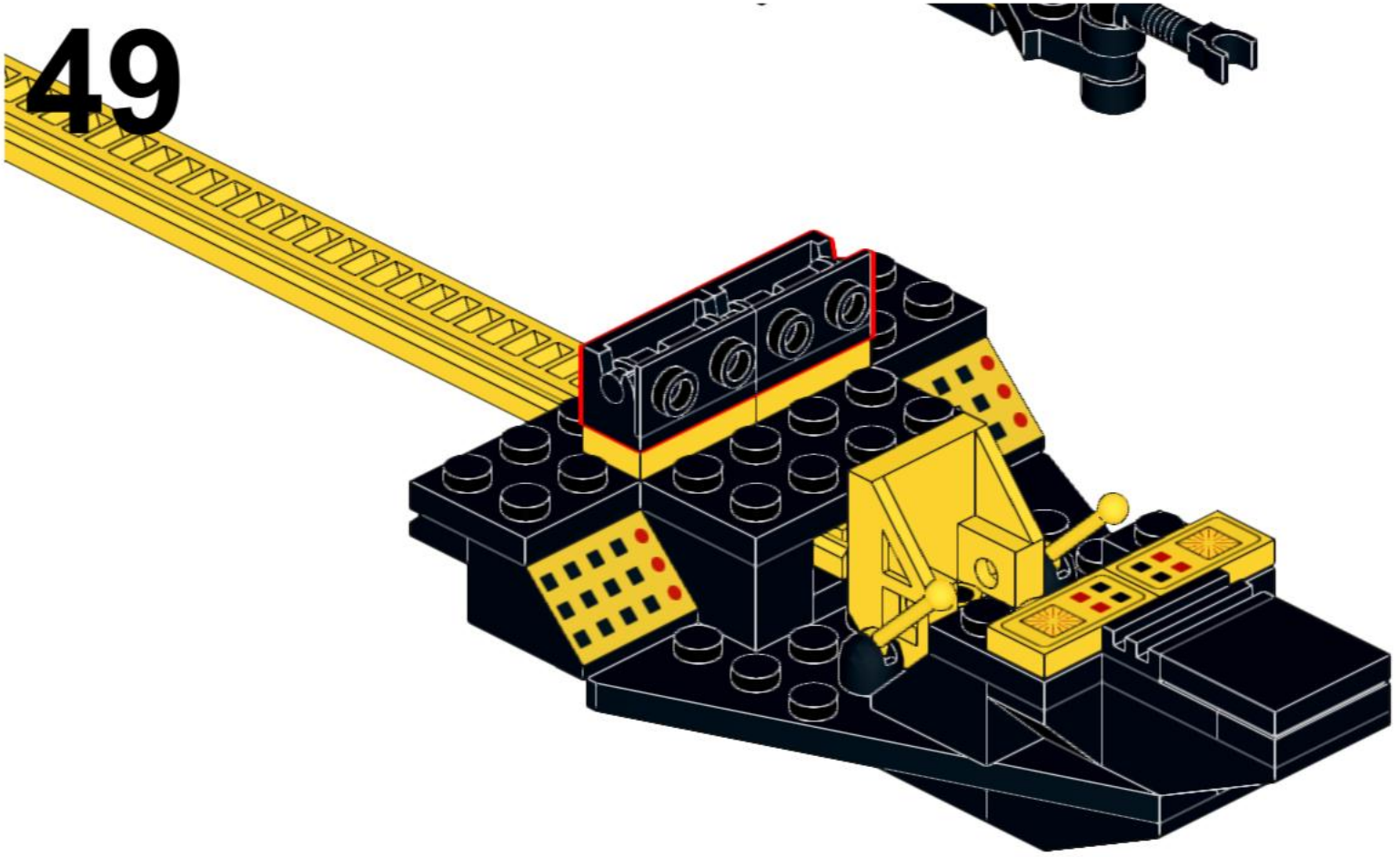



# 50

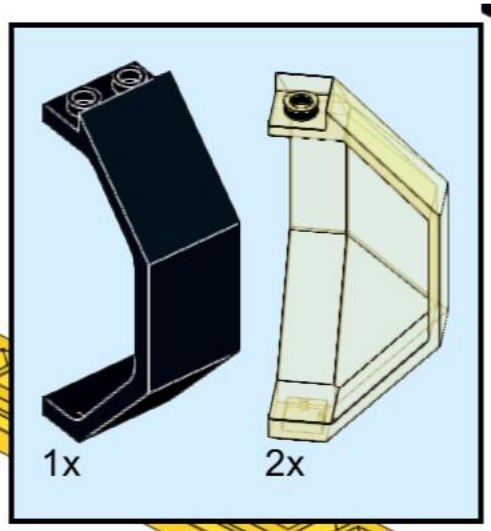




# 51

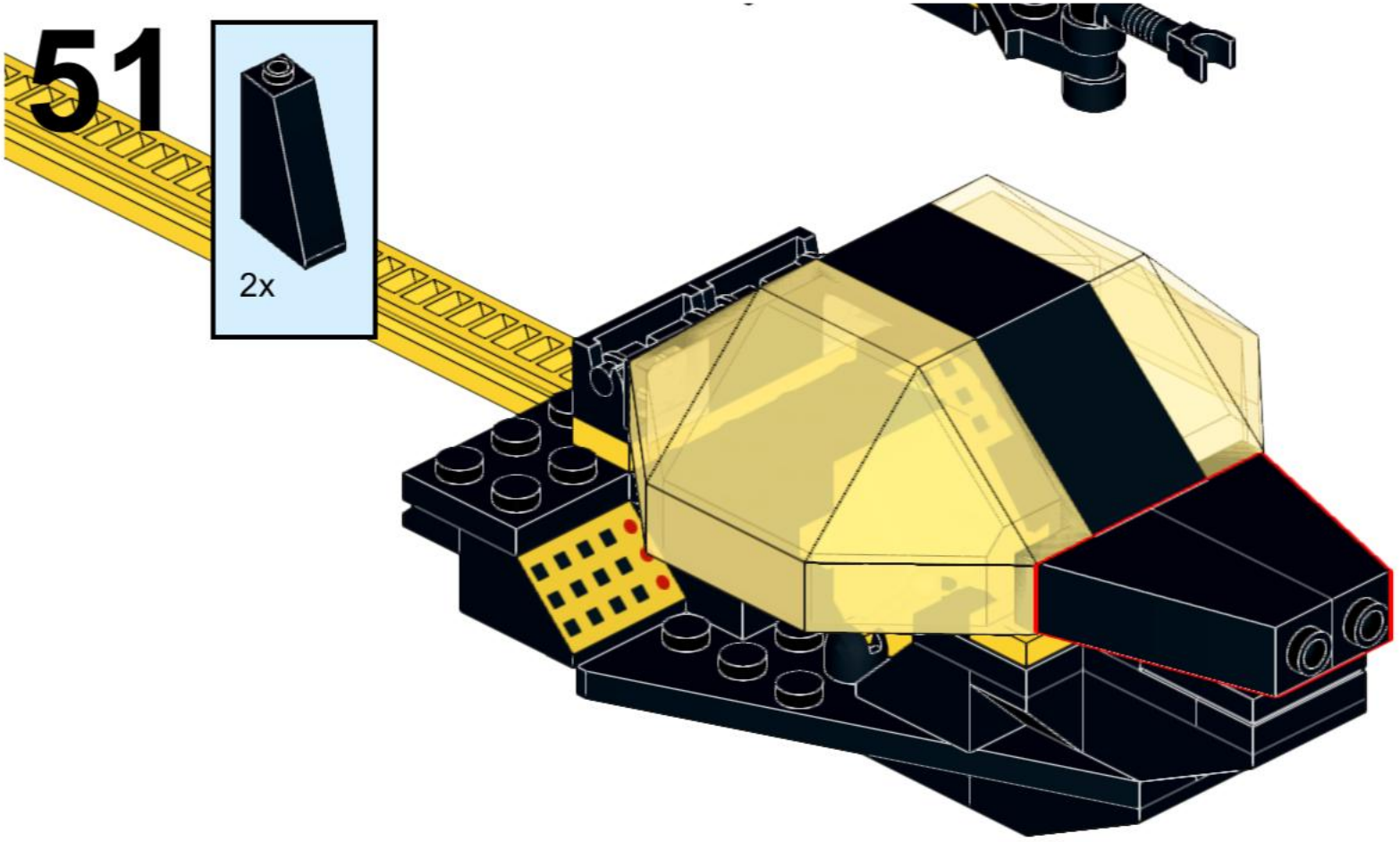

# 52



# 53

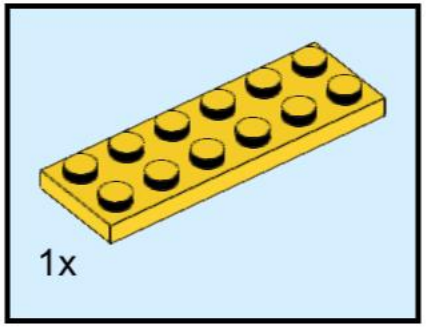


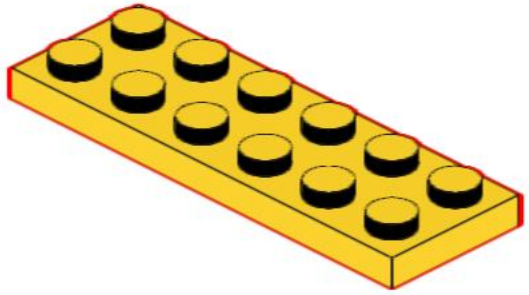

# 54

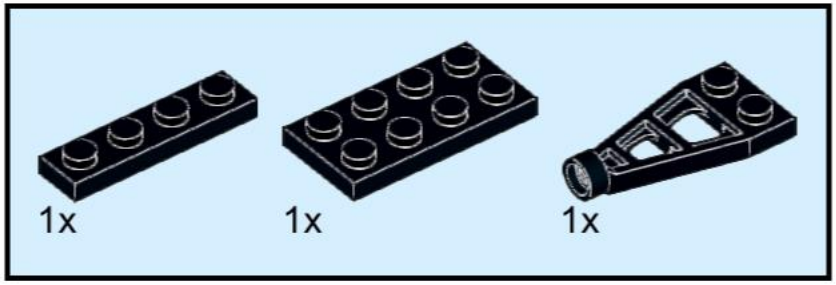


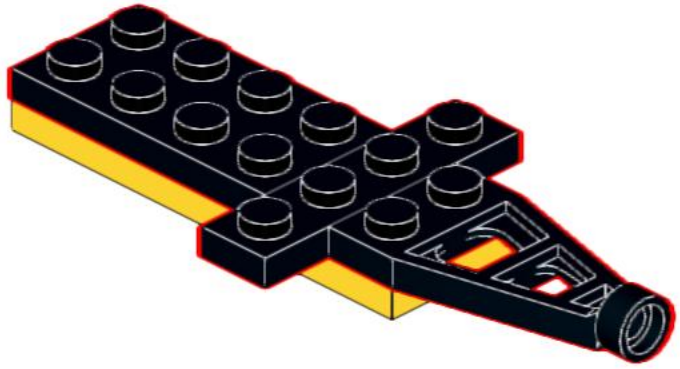

# 55

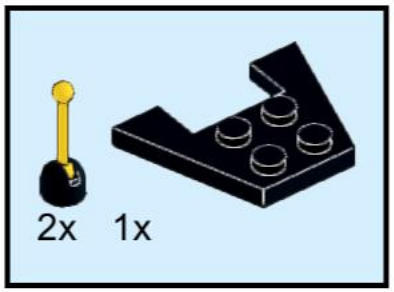


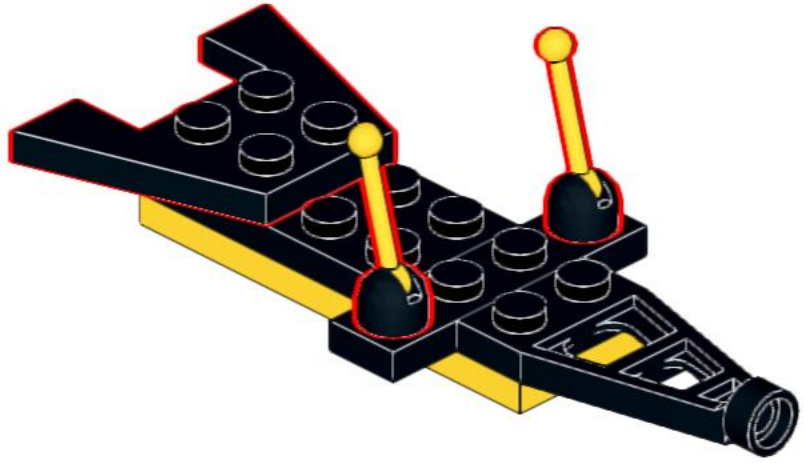

# 56

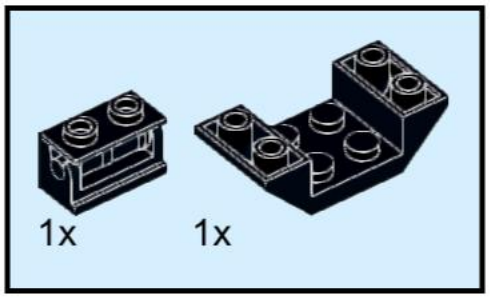


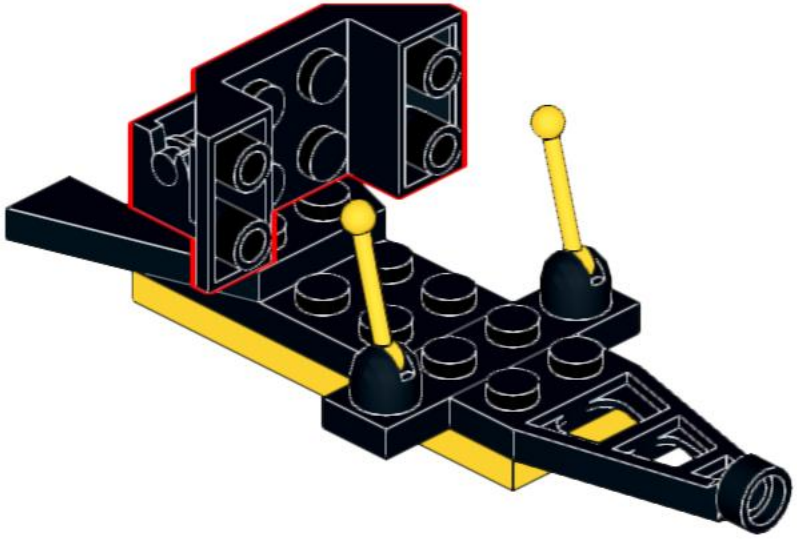

# 57




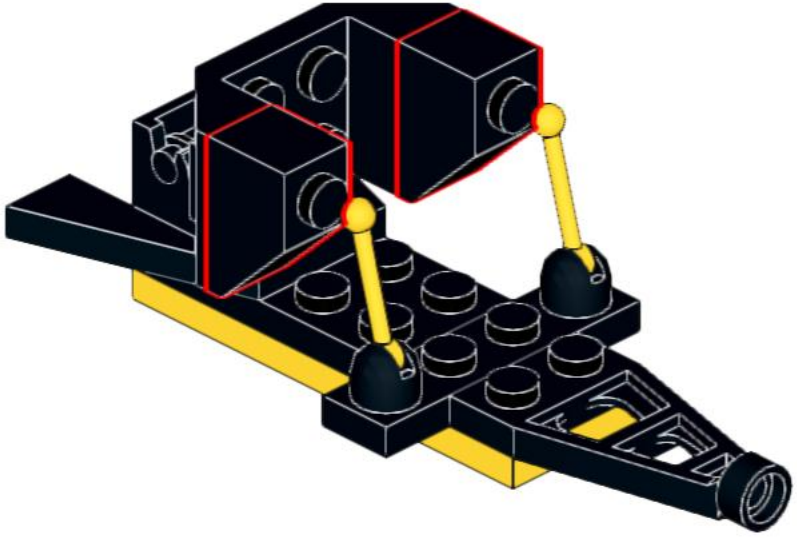

# 58

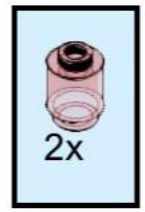


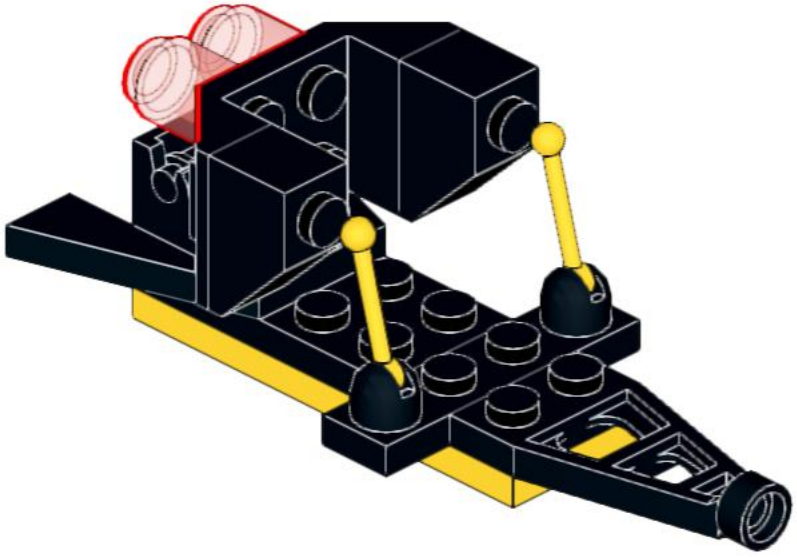

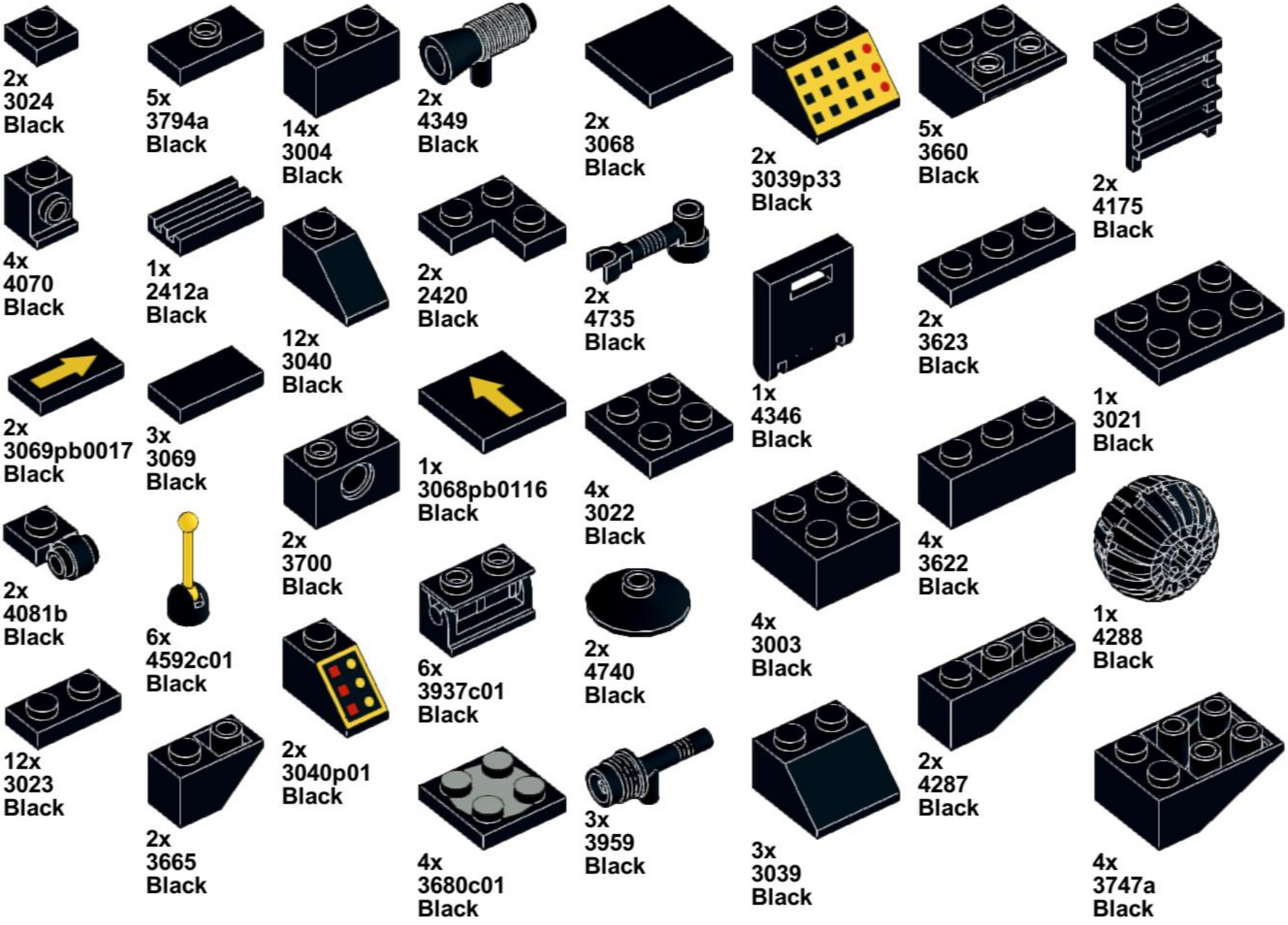
2x
3024
Black
5x
3794a
Black
14x
3004
Black
2x
4349
Black
2x
3068
Black
2x
3039p33
Black
5x
3660
Black
2x
4175
Black
4x
4070
Black
1x
2412a
Black
12x
3040
Black
2x
2420
Black
2x
4735
Black
1x
4346
Black
2x
3623
Black
1x
3021
Black
2x
3069pb0017
Black
3x
3069
Black
1x
3068pb0116
Black
4x
3022
Black
4x
3622
Black
2x
4081b
Black
6x
4592c01
Black
2x
3700
Black
6x
3937c01
Black
2x
4740
Black
4x
3003
Black
1x
4288
Black
12x
3023
Black
2x
3040p01
Black
3x
3959
Black
2x
4287
Black
2x
3665
Black
4x
3680c01
Black
3x
3039
Black
4x
3747a
Black



7x
3710
Black



4x
2450
Black



2x
4460a
Black

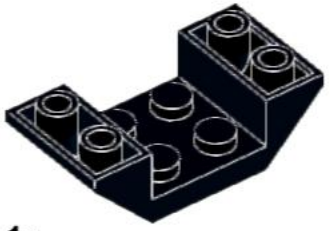

1x
4871
Black



1x
3936
Black



5x
4590
Black



2x
3633
Black



3x
3020
Black



1x
4859
Black



1x
3935
Black



2x
2431
Black



2x
3010
Black



1x
4596
Black



2x
4229
Black



1x
4345a
Black

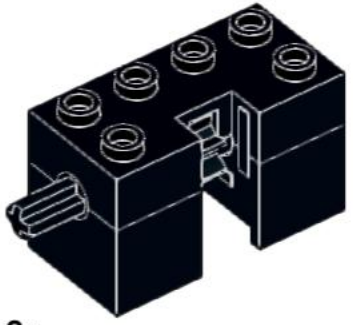

2x
2426c01
Black



1x
4873
Black



3x
3795
Black



1x
3032
Black



5x
2466
Black



2x
3666
Black

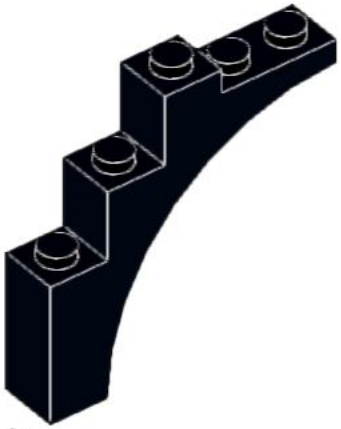

2x
2339
Black



4x
4162
Black



7x
3009
Black



3x
3008
Black



12x
4476b
Black

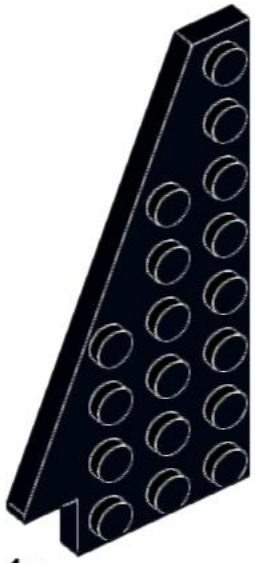

1x
3933a
Black

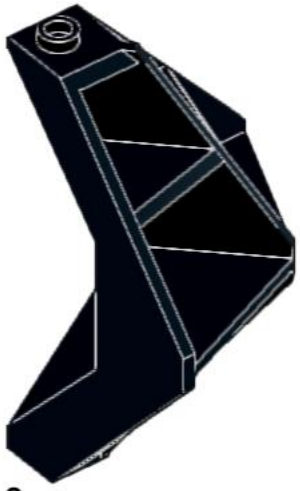

2x
4737
Black



2x
3034
Black



1x
3934a
Black



2x
3832
Black

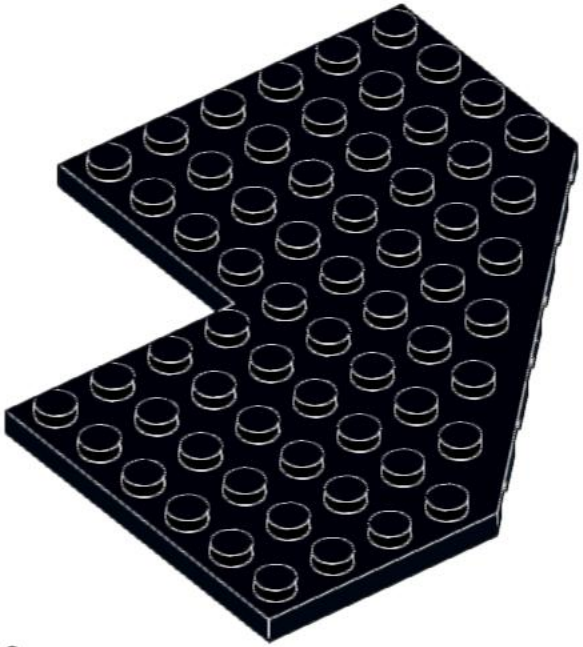

2x
2401
Black



3x
4282
Black



6x
2465
Black



1x
2408p02
Black



2x
3070p06
Yellow



2x
3024
Yellow



2x
4085b
Yellow



5x
3069p25
Yellow

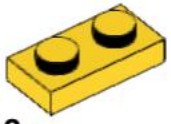

2x
3023
Yellow

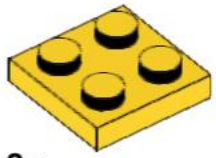

2x
3022
Yellow

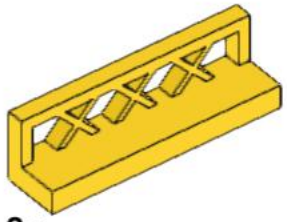

2x
3633
Yellow

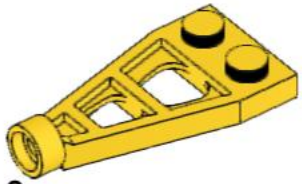

2x
4596
Yellow

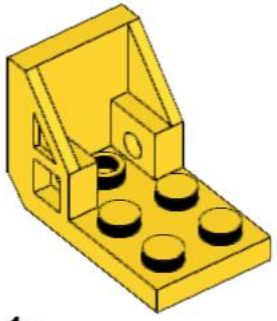

1x
4598
Yellow

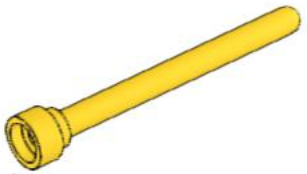

2x
3957
Yellow

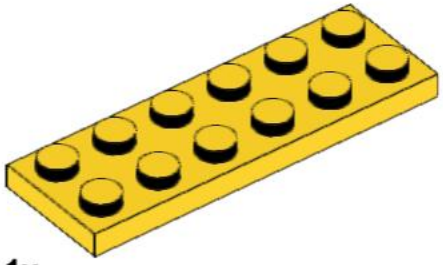

1x
3795
Yellow

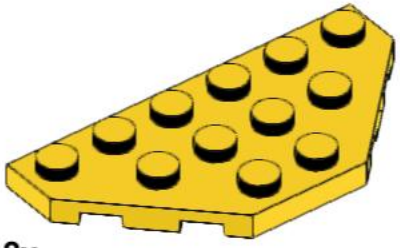

2x
2419
Yellow

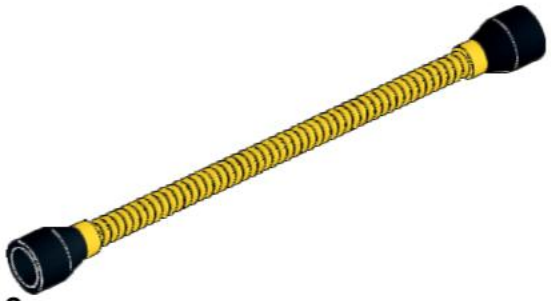

2x
73590c03b
Yellow

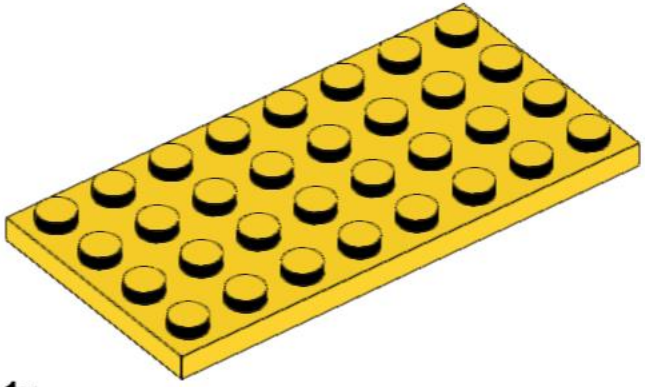

1x
3035
Yellow

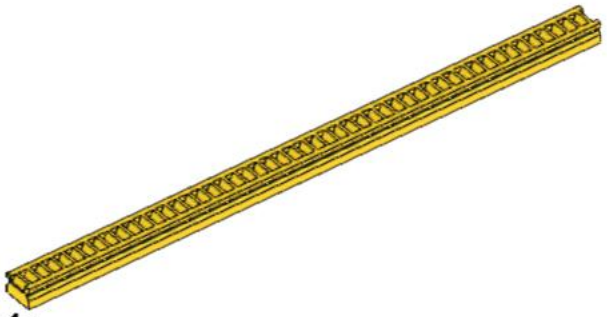

1x
2428
Yellow



2x
2362a
Trans-Yellow



10x
3062
Trans-Red



10x
4740
Trans-Red

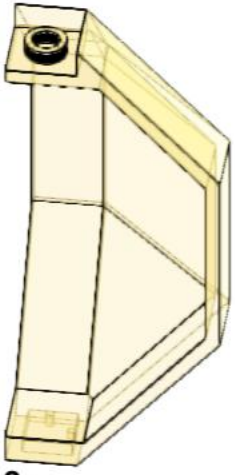

2x
2468
Trans-Yellow

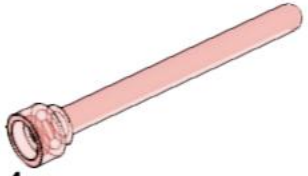

4x
3957
Trans-Red

# 59

